GYROLOK® **Tube Fittings**

Index

Safety Information	Inside Front Cover
GYROLOK® Fitting Locator	2-7
GYROLOK® Features & Benefits	8
GYROLOK® Design	9
How to Order	**10**
Pipe Thread Information	11
SAE Fittings Information	11
GYROLOK® Fitting Dimensional & Application Tables	12
Replacement Parts	47
Safety Changers	48
Tube Inserts	49
Dielectric Fittings	51
Chromatography Fittings	52
Tools and Accessories	54
RS Bonded Seals	57
Installation Instructions	
SAE Fittings	11
O-rings	14
Port Connectors	39-40
Thermocouple Assembly	41
Tube Inserts Assembly	49
GMT Usage Instructions	54
Leak Detective	55
GYROLOK® Assembly & Reassembly	58
Integral GYROLOK® Assembly & Reassembly	59-60
Disclaimers	Inside Back Cover

GYROLOK®

CRANE Instrumentation & Sampling, HOKE®
PO Box 4866 • Spartanburg, SC 29305-4866
(864) 574-7966 • www.hoke.com

For Your Safety

It is solely the responsibility of the system designer and user to select products suitable for their specific application requirements and to ensure proper installation, operation, and maintenance of these products. When selecting products, the total system design must be considered to ensure safe, trouble-free performance. Material compatibility, product ratings and application details should be considered in the selection. Improper selection or use of products described herein can cause personal injury or property damage.

Contact your authorized HOKE® sales and service representative for information about additional sizes and special alloys.

SAFETY WARNING:

HOKE® products are designed for installation only by professional suitably qualified licensed system installers experienced in the applications and environments for which the products are intended. These products are intended for integration into a system. Where these products are to be used with flammable or hazardous media, precautions must be taken by the system designer and installer to ensure the safety of persons and property. Flammable or hazardous media pose risks associated with fire or explosion, as well as burning, poisoning or other injury or death to persons and/or destruction of property. The system designer and installer must provide for the capture and control of such substances from any vents in the product(s). The system installer must not permit any leakage or uncontrolled escape of hazardous or flammable substances. The system operator must be trained to follow appropriate precautions and must inspect and maintain the system and its components including the product(s) and at regular intervals in accordance with timescales recommended by the supplier to prevent unacceptable wear or failure.

GYROLOK® **Tube Fittings**

9 Decades of Product Excellence

Samuel W. HOKE began manufacturing small gas flow control valves for jewelers' torches in 1925. At the same time, he also laid the foundation for a top international fluid control products company, HOKE® Incorporated.

In the early 1940's, S.W. HOKE produced the forerunners of today's HOKE® valves, masterfully crafted with the highest quality materials.

In the early 1960's, HOKE® Incorporated (HOKE®) took the industry by storm, introducing the GYROLOK® Tube Fitting. To this day, no other manufacturer has been able to improve upon its unique design.

Over the years, HOKE® built a first-class reputation for designing and manufacturing state-of-the-art products. In striving for maximum quality and value, HOKE® set the industry standards for product safety, operability, durability and reliability.

CRANE continues this product excellence for all global customers.

Training and Engineering Support

CRANE offers extensive training designed to ensure that your craftspeople thoroughly understand how a GYROLOK® fitting functions. By teaching proper tubing preparation and installation procedures, maximum performance is assured.

CRANE will take the time to assist our customers in finding the GYROLOK® fitting that is right for their specific needs. Ask your HOKE® distributor for details regarding HOKE's valve and fitting installation workshop and additional support materials.

GYROLOK®

Fitting Locator

To connect tubing to a female thread, use:

PROFILE	PART NUMBER - DESCRIPTION	TUBE OPTIONS	THREAD CONNECTION	PAGE LOCATION
	CM - Male Connector	Fractional or metric tube	NPT/RT threads	12
	CM/ - Male Connector	Fractional or metric tube	RP/RS threads	15, 16
	BCM - Bulkhead Connector, Male	Fractional or metric tube	NPT thread	13
	CMS - Male Connector, SAE	Fractional tube	SAE/MS straight threads	13
	LCMS - Long Male Connector, SAE	Fractional tube	SAE/MS straight threads	13
	COS - O-ring Straight Connector	Fractional tube	O-ring straight thread	14
	COM - O-ring Male Connector	Fractional tube	Female pipe thread	14
	LM - Male Elbow	Fractional or metric tube	NPT/RT/RS/RT threads	17, 18
	LMF - 45° Male Elbow	Fractional tube	NPT thread	19
	LMFS - 45° Positionable Male Elbow	Fractional tube	SAE/MS straight threads	19

Dimensions for reference only. Subject to change.

To connect tubing to a female thread, use:

PROFILE	PART NUMBER - DESCRIPTION	TUBE OPTIONS	THREAD CONNECTION	PAGE LOCATION
	LMS - 45° Positionable Male Elbow	Fractional or metric tube	SAE/MS straight threads	19
	TTM - Male Branch Tee	Fractional or metric tube	NPT thread	20
	TMT - Male Run Tee	Fractional or metric tube	NPT thread	21
	TST - Positionable Male Run Tee	Fractional tube	SAE/MS straight threads	21
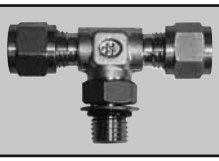	**TTS** - Positionable Male Branch Tee	Fractional or metric tube	SAE/MS straight threads	21

To connect tubing to a male thread, use:

PROFILE	PART NUMBER - DESCRIPTION	TUBE OPTIONS	THREAD CONNECTION	PAGE LOCATION
	CF - Female Connector	Fractional or metric tube	NPT/RT/RG threads	22, 23, 24
	BCF - Bulkhead Connector, Female	Fractional or metric tube	NPT thread	25
	LF - Female Elbow	Fractional or metric tube	NPT/RT threads	26
	TFT - Female Run Tee	Fractional or metric tube	NPT thread	27
	TTF - Female Branch Tee	Fractional or metric tube	NPT thread	27

To connect two or more tubes together, use:

PROFILE	PART NUMBER - DESCRIPTION	TUBE OPTIONS	THREAD CONNECTION	PAGE LOCATION
	U - Union	Fractional or metric tube	—	28
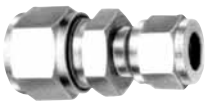	**RU** - Reducing Union	Fractional or metric tube	—	29
	BU - Bulkhead Union	Fractional or metric tube	—	30
	LU - Union Elbow	Fractional or metric tube	—	31
	TTT - Union Tee	Fractional or metric tube	—	31
	TTT_B - Reducing Run Tees	Fractional tube	—	32
	TTTB - Reducing Branch Tees	Fractional or metric tube	—	32
	C - Union Cross	Fractional or metric tube	—	33

To connect tubing to a 37° flare, use:

PROFILE	PART NUMBER - DESCRIPTION	TUBE OPTIONS	THREAD CONNECTION	PAGE LOCATION
	UAN - Union, AN	Fractional tube	Flared tube	34
	UANO - Union, AN O-ring	Fractional tube	Flared tube	34
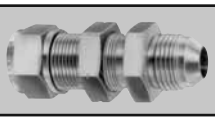	**BUAN** - Bulkhead Union, AN	Fractional tube	Flared tube	34
	AAN - Adaptor, AN	AN to GYROLOK® port	Flared tube	35

Dimensions for reference only. Subject to change.

To connect tubing to a welding system, use:

PROFILE	PART NUMBER - DESCRIPTION	TUBE OPTIONS	THREAD CONNECTION	PAGE LOCATION
	CW - Tube Socket Weld Connector	Fractional tube	—	35
	LW - Tube Socket Weld Elbow	Fractional or metric tube	—	35
	CBW - Butt Weld Connector	Fractional or metric tube to pipe	—	36
	LBW - Butt Weld Elbow	Fractional or metric tube to pipe	—	36

To reduce fitting size, use:

PROFILE	PART NUMBER - DESCRIPTION	TUBE OPTIONS	THREAD CONNECTION	PAGE LOCATION
	R - Reducer	Fractional or metric tube to port	—	37, 38

To connect tube fittings together, use:

PROFILE	PART NUMBER - DESCRIPTION	TUBE OPTIONS	THREAD CONNECTION	PAGE LOCATION
	PC - Port Connector	Fractional or metric tube	—	39
	PC - Reducing Port Connector	Fractional or metric tube	—	39

To cap a tube or plug a fitting, use:

PROFILE	PART NUMBER - DESCRIPTION	TUBE OPTIONS	THREAD CONNECTION	PAGE LOCATION
	CP - Cap	Fractional or metric tube	—	40
	P - Plug	Fractional or metric tube	—	40

As spare parts, use:

PROFILE	PART NUMBER - DESCRIPTION	TUBE OPTIONS	THREAD CONNECTION	PAGE LOCATION
	FR - Rear Ferrules (Also, available in Nylon)	Fractional or metric tube	—	47
	FF - Front Ferrules (Also, available in Nylon)	Fractional or metric tube	—	47
	N - Nut	Fractional or metric tube	—	47
	KN - Knurled Nut	Fractional tube	—	48
	BN - Bulkhead Nut	Fractional or metric tube	—	48
	SCNF - Safety Changer Nut & Ferrule Sets	Fractional tube	—	48
	SCF - Safety Changer Ferrule Sets	Fractional or metric tube	—	48

For specific applications, use:

PROFILE	PART NUMBER - DESCRIPTION	TUBE OPTIONS	THREAD CONNECTION	PAGE LOCATION
	CMT - Male Thermocouple Connector	Fractional or metric tube	NPT/RT Threads	41
	Chromatography Fittings	Fractional or metric tube	—	52, 53
	CLF - Lapped Joint Flange Connector	Fractional or metric tube	—	50
	XT - Heat Exchanger Tee	—	—	42
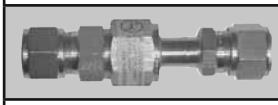	**DU, DCM** - Dielectric Fittings	Fractional or metric tube	—	51
	Calibration Fittings	Fractional tube to	—	50
	TI - Tube Inserts	Fractional or metric tube	—	49

Dimensions for reference only. Subject to change.

Tools & Accessories, use:

PROFILE	PART NUMBER - DESCRIPTION	TUBE OPTIONS	THREAD CONNECTION	PAGE LOCATION
	GMT - GYROLOK® Marking Tool	Fractional or metric tube	—	54
	PST - Pre-setting Tool	—	—	54
	LD - Leak Detective	—	—	55
	HPST - Hydraulic Pre-set Tool	Fractional or metric tube	—	56

GYROLOK® Adapters, use:

PROFILE	PART NUMBER - DESCRIPTION	TUBE OPTIONS	THREAD CONNECTION	PAGE LOCATION
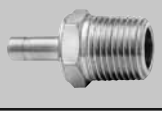	**AM** - Male Adapter	Fractional or metric tube	NPT/RT threads	43
	AM/ - Male Adapter	Fractional or metric tube	RT/RS/RG threads	44
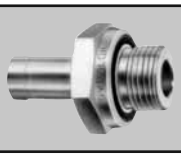	**AOS** - O-ring Straight Adaptor	Fractional tube	Female straight thread	44
	AMS - Male Adapter, SAE	Fractional tube	SAE/MS straight threads	44
	BA - Bulkhead Adapter	Fractional or metric tube	—	38
	AOM - O-Ring Male Adapter	Fractional or metric tube	Female pipe thread	44
	AF - Female Adapter	Fractional or metric tube	NPT/RT/RG threads	45, 46

GYROLOK® **Features & Benefits**

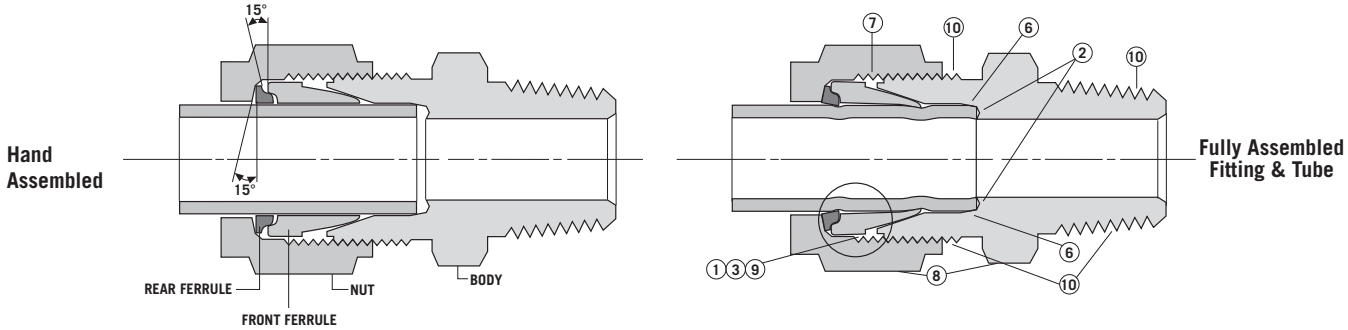

FEATURES	EXPLANATION	BENEFITS
1. CONTROLLED FERRULE DRIVE	Roll-in locking action of rear ferrule: During fitting makeup, 15° angles close — between the rear ferrule and nut, and between the rear ferrule and front ferrule — thus preventing overstressing of tubing or excessively reducing tubing inside diameter. Front ferrule shoulder: Front ferrule shoulder prevents body expansion and nut jamming, caused by over-tightening.	Provides maximum user safety under high pressure/ vibration conditions. Prevents overstressing, which causes tubing failure and possible injury. System efficiency is improved by maximizing flow. Provides unmatched remake life. Maximizes value and economy.
2. BUTT SEAL	Provides a secondary seal and eliminates dead space.	Maximizes fitting leak integrity and user safety. Can seal with scratched tubing. Increases accuracy in sampling applications. Reduces pump-down time in vacuum applications.
3. HOKE® VALVES WITH INTEGRAL GYROLOK® **END FITTINGS**	Controlled ferrule drive prevents end connection expansion, thus prolonging valve life and eliminating the need to use female-ended valves with separate fittings. Eliminates a possible leak path and extends valve life.	Long product life and maximum value. Safety and economy.
4. GYROLOK® **SAFETY CHANGER NUT AND FERRULE SETS**	Nut and ferrule sets supplied on rods, already correctly oriented. (Not necessary to handle ferrules when replacing components.)	Safest, simplest device for component replacement.
5. GMT	Marks tubing to show that tubing has been properly inserted into fitting, and that fitting has been properly tightened.	Maximum safety resulting from ability to verify correct tube insertion and proper tightening.
6. SIZING ANGLE	Slight taper in the base of the tube socket reduces possibility of tube sticking	Less tube sticking during disassembly saves time and money
7. SILVER-PLATED NUT THREADS	Silver-plating extends fitting life by preventing galling, up to 1200° F.	Extended product life at extreme temperatures.
8. MATERIAL TRACEABILITY ON FITTING BODY AND NUT	Bodies and nuts made of 316 Stainless Steel and MONEL® are heat code traceable to Certified Material Test Reports.	Traceability provides added safety. Certified Material Test Reports are available for review and verification.
9. PFA FERRULE COATING	Front ferrules—Sizes larger than 1" (25mm) are PFA coated.	Increased resistance to media and atmospheric corrosion.
10. SPECIAL HIGH TOLERANCE NPT THREAD	ANSI Standard B1.20.1 - Basic + 1/4 to Basic +1.	Provides a Safer more robust connection: 63% tighter tolerance with up to six thread engagement, reduced galling and vibration

Dimensions for reference only. Subject to change.

The GYROLOK® **Design**

GYROLOK® Tube Fittings have been carefully designed and manufactured to provide outstanding leak-tight integrity in a wide range of applications.

Materials

GYROLOK® fittings are available in:

Brass:	BR
304 Stainless Steel:	304/304L
316 Stainless Steel:	316/316L
MONEL®:	M
HASTELLOY® C-276:	HC
Duplex 2205:	DX3
INCONEL® Alloy:	625
INCONEL® Alloy:	825
Super Duplex 2507:	D50
Titanium:	TI
254 SMO:	6MO

316/316L SS Forgings:	ASTM A-182/SA182
304/304L SS Forgings:	ASTM A-182/SA182
Brass Bar Stock, Alloy 360:	ASTM B-16
316/316L SS Bar Stock:	ASTM A-479/SA479
304/304L SS Bar Stock:	ASTM A-479/SA479
MONEL® Forgings, Alloy 400:	QQ-N-281
Brass Forgings, Alloy 377:	QQ-B-626/ASTM B-283
MONEL® Bar Stock, Alloy 405:	QQ-N-281
Brass Bar Stock, Alloy 353:	ASTM B-453

Contact your local HOKE® distributor for further information.

Certified Material Text Reports (CMTRs)

Bodies and nuts of GYROLOK® fittings in all materials other than Brass are heat code traceable. To obtain CMTRs for these components, place separate orders for such items and specify "CMTRs required on all items".

Pressure Rating

GYROLOK® fitting ends are rated for working pressures higher than the tubing recommended for use with GYROLOK®. Under no circumstances should tubing be utilized at pressures above its maximum allowable working pressure. Refer to the HOKE® Tubing Data Charts for specific information. If no pressure is identified for a given tube size and tube wall thickness, that tubing is not considered suitable for use with GYROLOK® tube fittings. Pressure ratings may vary for the other fitting end if it is not GYROLOK® (i.e. NPT or O-Ring Seal). For general working pressure ratings for NPT fittings ends, refer to the HOKE® Pipe Fittings catalog. The user must determine whether both the GYROLOK® side and the non-GYROLOK® side working pressure ratings are suitable with the system pressure. For more information on GYROLOK® pressure ratings, contact your local distributor, or HOKE® directly.

PFA Coating

Stainless steel front ferrules larger than 1" and 25 mm are PFA coated.

Vacuum Rating

GYROLOK® offers deep vacuum capability. With good quality tubing, GYROLOK® fittings will be leak-tight at vacuum levels of 10^{-6} torr while tested with a leakage sensitivity of 10^{-9} scc

Temperature

GYROLOK® fittings provide safe, reliable performance from cryogenic temperatures to high temperature bake out levels, depending on material.

316 Stainless Steel:	-325° F to +800° F (-200° C to +426° C)*

Stainless steel front ferrules larger than 1" and 25mm are PFA coated. Applications above 450° F (232° C) require silver-plated front ferrules and uncoated rear ferrules. To order extended temperature fittings, add **–HT** to the basic part number.

Brass (copper tubing):	-325° F to +400° F (-200° C to +203° C)
MONEL®:	-325° F to +800° F (-200° C to +426° C)

* **CAUTION: (for Stainless Steel):** Intermittent use to 1200° F (649° C) is possible, however prolonged exposure to temperatures over 800° F (426° C) is not recommended.

Identifying Metric GYROLOK® **Products**

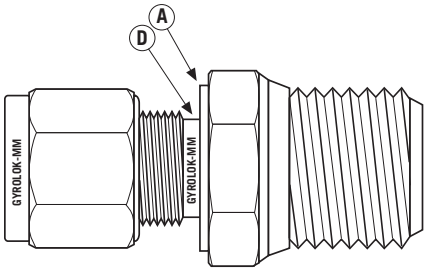

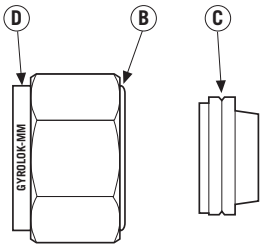

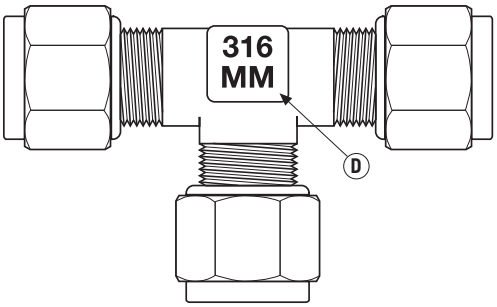

Metric GYROLOK® **products have certain features which allow you to identify them from fractional products.**

A. Step Machined on Body Hex

Straight bodies with a metric GYROLOK® end have a step on the tube fitting side of the hex.

B. Short Shank on Nut

Metric nuts have a short shank on the threaded end.

C. Groove in Front Ferrule

Metric front ferrules of brass or 316 stainless steel have a groove in the shoulder. For other materials, see D.

D. MM Marking

The metric designation "MM" is stamped on:

- metric nuts and straight bodies—after the GYROLOK® trademark
- metric elbows, tees and crosses—on the side opposite the HOKE® logo
- front ferrules made from materials other than brass or 316 stainless steel—after material identification.

E. Color Coding

Blue boxes designate metric parts and accessories, including Safety Changer packaging.

General Information

How to Order

The GYROLOK® numbering system is a completely descriptive system that's easy to understand. Each part number describes completely assembled fittings.

4 CM 4 316 [ ] [ ]

Tube O.D.
(Inches) In sixteenths of an inch
(1/4" O.D.)(Metric) In millimeters

Type Fitting
(male connector)

Pipe/Tube Size
(Inches) In sixteenths of an inch (1/4" NPT)
(Metric) In millimeters

Modifier per #9 (below)

Modifier per #5, 7, 8 (below)

Material

- **BR** – Brass
- **316** – 316 stainless steel
- **M** – MONEL®
- **HC** – HASTELLOY® C-276
- **625** – INCONEL® Alloy 625
- **825** – INCONEL® Alloy 825
- **TI** – Titanium
- **DX3** – Duplex 2205
- **D50** – Super Duplex 2507
- **6M0** – 254 SMO

1. The first number (4) identifies the tube O.D. size. For example, **4** = 4/16" for fractional fittings. **4** = 4mm for metric fittings. If there is no 5th group, sizes are fractional.

2. The letter group, (CM) identifies the type of fitting (Male Connector). See fitting locator, pages 2 and 3.

3. The third group, a number (4), is only necessary if the second tube connection size is different from the first tube O.D. size. For pipe sizes, a number is always required.

4. Material is identified in the fourth group.

5. With the exception of branch tees, the fifth group, if present, contains two letter codes. The first letter designates the unit of measure for the first number in the part number—i.e, **E** for fractional, **M** for metric. The second letter indicates the unit of measure (E or M), or thread type, for the second number in the part number. If there is no 5th group, all sizes are fractional.

   Examples:
   4CM4 316 = 1/4 tube x 1/4 NPT male connector, 316 stainless steel
   6RU3 BR ME = 6mm tube x 3/16 tube reducing union, brass
   8LM4 316 EC = 1/2 tube x 1/4 male RT, male elbow, 316 stainless steel

Unit of measure/end connector codes:

A = RS male ends
B = RP male ends
C = RT ends
E = fractional unit of measure in 1/16th of an inch
M = Metric tube, in millimeters
X = RS/RP female ends
Z = RG female ends

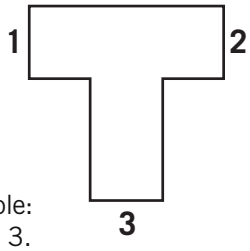

6. Tee part numbering: TEES are described by first the run (1 and 2) and next the branch (3), for example:
   TTM describes a tee that has tube connections at 1 and 2 and a male pipe thread at position 3.
   TFT describes a tee that has tube connections at 1 and 3 and a female pipe thread at position 2.

7. Fittings cleaned for oxygen service: To order, add **HPS18** to the end of basic fitting part number.
   Example: **4CM4316HPS18**

8. Fittings cleaned for nuclear service: To order, add **HPS90** to the end of basic fitting part number.
   Example: **4CM4316HPS90**

9. O-ring designator - Viton® (45) is standard for SAE fittings. In the event no material is specified, Viton will be supplied. Buna (21) is standard for other fittings with O-rings. Alternative O-ring materials are available, including silicone (01), and Buna-N (23). Example **6CMS631623**

Dimensions for reference only. Subject to change.

Thread Connections Available with GYROLOK® Fittings

Pipe Thread Information

GYROLOK® tube fittings are available with NPT (National Pipe Taper), BSP/ISO (British Standard Pipe/International Standards Organization), SAE or unified screw threads.

Tapered Threads

Specifications	Type	Part Number or Suffix Designation	Sealing Method
NPT	M/F	Fitting type ends in M or F, as in CM or CF	Seal is made on the thread. Thread sealant is required.
RT to ISO 7/1 • BS 21 • JIS B0203 • DIN 2999	M/F	Modifier is C, following the unit of measure for fractional (E) or metric (M), as in 6CM4316EC	Seal is made on the thread. Thread sealant is required. The BSP/ISO thread utilizes a different angle and the number of threads per inch may differ from NPT. Reference DIN 3852, Form C.
	M/F		
	M/F		
	Male		

Straight and Parallel Threads

Specifications	Type	Part Number or Suffix Designation	Sealing Method
American Standard unified screw threads	Male	Fitting type ends in S, as in COS or AOS.	Generally utilizes an elastomer O-ring to provide sealing.
RP to ISO 228/1 • BS 2779 • JIS B0202	Male	Modifier is B, following the unit of measure for fractional (E) or metric (M), as in 6CM4316EB	Metal to metal sealing to DIN 3852, Form B.**
RS to ISO 228/1 • BS 2779 • JIS B0202	Male	Modifier is A, following the unit of measure for fractional (E) or metric (M), as in 6CM4316EA	Utilizes a sealing washer to provide sealing. Reference DIN 3852, Form A.**
RG to ISO 228/1 • BS 2779 • JIS B0202	Female	Modifier is Z, following the unit of measure for fraction (E) or metric (M), as in 6CF4316EZ	Sealing form meets DIN 16288, Form Z.

** Female RP or RS end available with Form X.

GYROLOK® Fittings with SAE Ends

SAE Straight Thread O-Ring Seal Fittings

GYROLOK®'s SAE Straight Thread O-Ring Seal Fittings are designed and manufactured to SAE standards defined below for use in many different applications including hydraulics and natural gas vehicles. HOKE's SAE Straight Thread O-Ring Fittings are supplied with Viton O-rings.

Fittings available include: Tube to SAE straight connectors, positionable SAE elbows and tees, and SAE reducers.

SAE Specifications

HOKE's SAE Straight Thread O-Ring Seal Fittings are designed and manufactured to meet SAE Standards as follows:

- Male or External Fitting End Dimensions: SAE J514
- Straight Threads: SAE J475 (equivalent to ANSI B1.1 or ISO R725)
- Female or Internal Straight Thread Boss: SAE J1926 (see diagram below)

Thread and O-ring Sizes in inches

Nominal Tube O.D.	Port Size	Thread Size	O-ring Size #
1/8	2	5/16 - 24	902
1/4	4	7/16 - 20	904
3/8	6	9/16 - 18	906
1/2	8	3/4 - 16	908
5/8	10	7/8 - 14	910
3/4	12	1 1/16 - 12	912
1	16	1 5/16 - 12	916

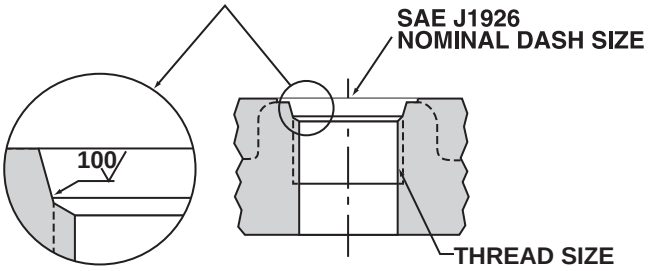

Installation Instructions

Positionable End Connections

1. Assure that the locknut is fully raised.
2. Turn the external SAE end clockwise into the internal boss until the metal washer is in contact with the boss.
3. Orient the GYROLOK® end to the proper direction by now turning the fitting *counterclockwise* up to a *maximum* of 1 turn.
4. While supporting the body wrench pad with a backup wrench, tighten the locknut until the washer is snug against the face of the boss.

GYROLOK® Assembly Instructions, see page 58.

Male Connector: CM, CM/EC

connects fractional tube to female NPT or RT threads

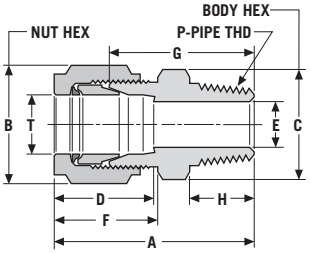

Part Number*				Dimensions — inches							
NPT Threads	RT Threads	T Tube O.D.	P Male NPT Size	A	B Hex Flat	C Hex Flat	D	E	F	G	H
1CM1[ ]	—	1/16	1/16	.97	5/16	5/16	.41	.05	.48	.75	.38
1CM2[ ]	—	1/16	1/8	1.03	5/16	7/16	.41	.05	.48	.81	.38
1CM4[ ]	—	1/16	1/4	1.22	5/16	9/16	.41	.19	.48	1	.56
2CM1[ ]	—	1/8	1/16	1.19	7/16	7/16	.56	.09	.67	.88	.38
2CM2[ ]	2CM2[ ]EC	1/8	1/8	1.22	7/16	7/16	.56	.09	.67	.91	.38
2CM4[ ]	2CM4[ ]EC	1/8	1/4	1.44	7/16	9/16	.56	.09	.67	1.13	.56
3CM2[ ]	—	3/16	1/8	1.27	1/2	7/16	.59	.13	.70	.95	.38
3CM4[ ]	3CM4[ ]EC	3/16	1/4	1.50	1/2	9/16	.59	.13	.70	1.19	.56
4CM1[ ]	—	1/4	1/16	1.33	9/16	1/2	.64	.10	.77	1	.38
4CM2[ ]	4CM2[ ]EC	1/4	1/8	1.33	9/16	1/2	.64	.19	.77	1	.38
4CM4[ ]	4CM4[ ]EC	1/4	1/4	1.58	9/16	9/16	.64	.19	.77	1.25	.56
4CM6[ ]	4CM6[ ]EC	1/4	3/8	1.58	9/16	11/16	.64	.19	.77	1.25	.56
4CM8[ ]	4CM8[ ]EC	1/4	1/2	1.80	9/16	7/8	.64	.19	.77	1.47	.75
4CM12[ ]	—	1/4	3/4	1.83	9/16	1 1/16	.64	.19	.77	1.50	.75
6CM2[ ]	6CM2[ ]EC	3/8	1/8	1.45	11/16	5/8	.72	.19	.83	1.09	.38
6CM4[ ]	6CM4[ ]EC	3/8	1/4	1.64	11/16	5/8	.72	.28	.83	1.28	.56
6CM6[ ]	6CM6[ ]EC	3/8	3/8	1.64	11/16	11/16	.72	.28	.83	1.28	.56
6CM8[ ]	6CM8[ ]EC	3/8	1/2	1.86	11/16	7/8	.72	.28	.83	1.50	.75
6CM12[ ]	—	3/8	3/4	1.86	11/16	1 1/16	.72	.28	.83	1.50	.75
8CM2[ ]	—	1/2	1/8	1.56	7/8	13/16	.97	.19	.92	1.09	.38
8CM4[ ]	8CM4[ ]EC	1/2	1/4	1.78	7/8	13/16	.97	.30	.92	1.31	.56
8CM6[ ]	8CM6[ ]EC	1/2	3/8	1.78	7/8	13/16	.97	.41	.92	1.31	.56
8CM8[ ]	8CM8[ ]EC	1/2	1/2	1.97	7/8	7/8	.97	.42	.92	1.50	.75
8CM12[ ]	8CM12[ ]EC	1/2	3/4	2	7/8	1 1/16	.97	.42	.92	1.53	.75
8CM16[ ]	—	1/2	1	2.19	7/8	1 3/8	.97	.42	.92	1.72	.94
10CM6[ ]	—	5/8	3/8	1.78	1	15/16	1	.41	.92	1.34	.56
10CM8[ ]	10CM8[ ]EC	5/8	1/2	1.97	1	15/16	1	.50	.92	1.53	.75
10CM12[ ]	—	5/8	3/4	2	1	1 1/16	1	.50	.92	1.56	.75
12CM8[ ]	—	3/4	1/2	2.08	1 1/8	1 1/16	1	.42	.97	1.63	.75
12CM12[ ]	—	3/4	3/4	2.08	1 1/8	1 1/16	1	.66	.97	1.63	.75
12CM16[ ]	—	3/4	1	2.39	1 1/8	1 3/8	1	.66	.97	1.94	.94
14CM12[ ]	—	7/8	3/4	2.08	1 1/4	1 3/16	1.06	.72	.97	1.64	.75
16CM8[ ]	—	1	1/2	2.36	1 1/2	1 3/8	1.31	.50	1.08	1.78	.75
16CM12[ ]	—	1	3/4	2.36	1 1/2	1 3/8	1.31	.72	1.08	1.39	.75
16CM16[ ]	—	1	1	2.55	1 1/2	1 3/8	1.31	.88	1.08	1.97	.94
20CM16[ ]	—	1 1/4	1	3.04	1 7/8	1 3/4	1.62	.90	1.53	2.17	.94
20CM20[ ]	—	1 1/4	1 1/4	3.04	1 7/8	1 3/4	1.62	1.10	1.53	2.17	.94
24CM24[ ]	—	1 1/2	1 1/2	3.50	2 1/4	2 1/8	1.97	1.30	1.78	2.43	1.03
32CM32[ ]	—	2	2	4.47	3	2 3/4	2.66	1.80	2.47	3	1.06

Male Connector: CM/ME, CM/MC

connects metric tube with NPT or RT tapered threads

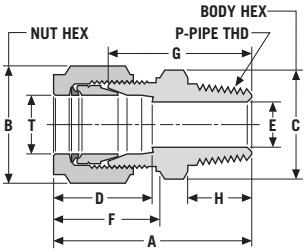

Part Number*		T Tube O.D.	P Pipe Thd.	Dimensions — mm							
NPT Threads	RT Threads			A	B Hex Flat	C Hex Flat	D	E	F	G	H
3CM2[ ]ME	3CM2[ ]MC	3	1/8	32.3	11.1	11.1	14.3	2.2	17.1	24.4	9.5
3CM4[ ]ME	3CM4[ ]MC	3	1/4	37.1	11.1	14.3	14.3	2.2	17.1	29.1	14.3
4CM2[ ]ME	4CM2[ ]MC	4	1/8	33.1	12.7	11.1	15.1	2.3	17.9	25.3	9.5
4CM4[ ]ME	4CM4[ ]MC	4	1/4	38.0	12.7	14.3	15.1	2.3	17.9	30.2	14.3
6CM2[ ]ME	6CM2[ ]MC	6	1/8	34.8	14.3	12.7	16.3	3.8	19.5	26.4	9.5
6CM4[ ]ME	6CM4[ ]MC	6	1/4	39.5	14.3	14.3	16.3	3.8	19.5	31.2	14.3
6CM6[ ]ME	6CM6[ ]MC	6	3/8	40.1	14.3	17.5	16.3	3.8	19.5	31.8	14.3
6CM8[ ]ME	6CM8[ ]MC	6	1/2	45.7	14.3	22.2	16.3	3.8	19.5	37.3	19.1
6CM12[ ]ME	6CM12[ ]MC	6	3/4	46.5	14.3	27.0	16.3	3.8	19.5	38.1	19.1
8CM2[ ]ME	8CM2[ ]MC	8	1/8	35.6	15.9	14.3	16.7	4.6	19.1	27.6	9.5
8CM4[ ]ME	8CM4[ ]MC	8	1/4	39.8	15.9	14.3	16.7	5.8	19.1	31.8	14.3
8CM6[ ]ME	8CM6[ ]MC	8	3/8	39.8	15.9	17.5	16.7	5.8	19.1	31.8	14.3
8CM8[ ]ME	8CM8[ ]MC	8	1/2	46.3	15.9	22.2	16.7	5.8	19.1	38.3	19.1
8CM12[ ]ME	8CM12[ ]MC	8	3/4	46.5	15.9	27.0	16.7	5.8	19.1	38.9	19.1
10CM2[ ]ME	10CM2[ ]MC	10	1/8	35.8	19.1	17.5	17.5	4.6	19.8	27.8	9.5
10CM4[ ]ME	10CM4[ ]MC	10	1/4	40.5	19.1	17.5	17.5	7.0	19.8	32.5	14.3
10CM6[ ]ME	10CM6[ ]MC	10	3/8	40.5	19.1	17.5	17.5	7.4	19.8	32.5	14.3
10CM8[ ]ME	10CM8[ ]MC	10	1/2	46.1	19.1	22.2	17.5	7.9	19.8	38.1	19.1
12CM4[ ]ME	12CM4[ ]MC	12	1/4	45.3	22.2	20.6	24.6	7.0	23.4	33.3	14.3
12CM6[ ]ME	12CM6[ ]MC	12	3/8	45.3	22.2	20.6	24.6	9.9	23.4	33.3	14.3
12CM8[ ]ME	12CM8[ ]MC	12	1/2	50.0	22.2	22.2	24.6	9.9	23.4	38.1	19.1
12CM12[ ]ME	12CM12[ ]MC	12	3/4	50.8	22.2	27.0	24.6	9.9	23.4	38.9	19.1
14CM4[ ]ME	14CM4[ ]MC	14	1/4	42.0	23.8	22.2	22.2	7.0	21.0	32.6	14.3
14CM6[ ]ME	14CM6[ ]MC	14	3/8	42.0	23.8	22.2	22.2	9.9	21.0	32.6	14.3
14CM8[ ]ME	14CM8[ ]MC	14	1/2	47.5	23.8	22.2	22.2	11.9	21.0	38.1	19.1
15CM8[ ]ME	15CM8[ ]MC	15	1/2	48.4	23.8	22.2	22.2	12.7	21.8	38.1	19.1
16CM6[ ]ME	16CM6[ ]MC	16	3/8	45.2	25.4	23.8	25.0	9.9	23.4	34.0	14.3
16CM8[ ]ME	16CM8[ ]MC	16	1/2	50.0	25.4	23.8	25.0	12.7	23.4	38.9	19.1
16CM12[ ]ME	16CM12[ ]MC	16	3/4	50.8	25.4	27.0	25.0	12.7	23.4	39.6	19.1
18CM8[ ]ME	18CM8[ ]MC	18	1/2	51.1	28.6	27.0	25.4	12.7	24.6	41.2	19.1
18CM12[ ]ME	18CM12[ ]MC	18	3/4	51.1	28.6	27.0	25.4	15.8	24.6	41.2	19.1
20CM8[ ]ME	20CM8[ ]MC	20	1/2	55.5	31.8	30.2	31.0	11.9	27.0	41.7	19.1
20CM12[ ]ME	20CM12[ ]MC	20	3/4	55.5	31.8	30.2	31.0	16.7	27.0	41.7	19.1
22CM8[ ]ME	22CM8[ ]MC	22	1/2	52.8	31.8	30.2	27.0	12.7	24.6	41.6	19.1
22CM12[ ]ME	22CM12[ ]MC	22	3/4	52.8	31.8	30.2	27.0	17.9	24.6	41.6	19.1
22CM16[ ]ME	22CM16[ ]MC	22	1	62.0	31.8	34.9	27.0	17.9	24.6	50.8	23.8
25CM12[ ]ME	25CM12[ ]MC	25	3/4	59.7	38.1	34.9	33.3	18.1	27.4	45.2	19.1
25CM16[ ]ME	25CM16[ ]MC	25	1	65.4	38.1	34.9	33.3	21.7	27.4	51.0	23.8
30CM16[ ]ME	—	30	1	78.2	50.8	47.6	38.0	22.3	41.2	55.6	24.9
30CM20[ ]ME	—	30	1 1/4	77.9	50.8	46.0	37.8	27.6	41.0	55.6	23.9
32CM16[ ]ME	—	32	1	80.1	50.8	47.6	42.3	22.3	42.9	56.7	24.9
38CM16[ ]ME	—	38	1	89.5	60.3	55.6	49.4	22.3	49.5	61.7	24.9
38CM20[ ]ME	—	38	1 1/4	89.2	60.3	55.6	49.4	28.6	49.5	61.7	24.9
38CM24[ ]ME	—	38	1 1/2	91.6	60.3	55.6	49.4	33.9	49.5	64.0	26.2

* [ ] see page 9 for material specifications.

Dimensions for reference only. Subject to change.

Bulkhead Connector, Male: BCM

connects fractional tube to female NPT threads

Metric fitting shown

Part Number*	T Tube O.D.	P Pipe Size	A	B Hex Flat	C Hex Flat	D	E	Fx	G	J Hex Flat	Panel Hole Size	Max. Panel Thickness
			Dimensions — inches									
2BCM2[ ]	1/8	1/8	1.88	7/16	1/2	.56	.09	1.28	1.56	1/2	.33	.44
2BCM4[ ]	1/8	1/4	2.06	7/16	9/16	.56	.09	1.28	1.75	1/2	.33	.44
3BCM2[ ]	3/16	1/8	1.91	1/2	9/16	.59	.13	1.31	1.59	9/16	.39	.47
4BCM2[ ]	1/4	1/8	1.98	9/16	5/8	.64	.19	1.36	1.66	5/8	.45	.47
4BCM4[ ]	1/4	1/4	2.17	9/16	5/8	.64	.19	1.36	1.84	5/8	.45	.47
6BCM4[ ]	3/8	1/4	2.31	11/16	3/4	.72	.28	1.50	1.97	3/4	.58	.53
6BCM6[ ]	3/8	3/8	2.33	11/16	3/4	.72	.28	1.52	1.97	3/4	.58	.53
6BCM8[ ]	3/8	1/2	2.53	11/16	15/16	.7	.28	1.50	2.19	3/4	.58	.53
8BCM6[ ]	1/2	3/8	2.56	7/8	15/16	.97	.41	1.72	2.09	15/16	.77	.59
8BCM8[ ]	1/2	1/2	2.75	7/8	15/16	.97	.42	1.72	2.28	15/16	.77	.59

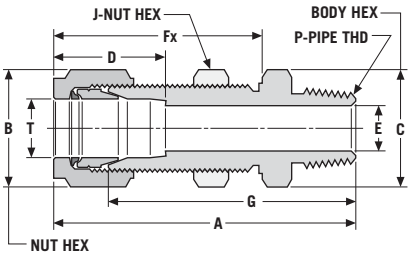

Bulkhead Connector, Male: BCM/ME

connects metric tube to female NPT threads

Part Number*	T Tube O.D.	P Pipe Thd.	A	B Hex Flat	C Hex Flat	D	E	Fx	G	J Hex Flat	Panel Hole Size	Max. Panel Thickness
			Dimensions — mm									
3BCM2[ ]ME	3	1/8	48.0	11.1	12.5	14.3	2.2	32.5	40.0	12.7	8.3	12.0
6BCM2[ ]ME	6	1/8	50.5	14.3	15.9	16.3	3.8	34.6	42.2	15.9	11.5	13.0
6BCM4[ ]ME	6	1/4	55.2	14.3	15.9	16.3	3.8	34.6	46.8	15.9	11.5	13.0
6BCM6[ ]ME	6	3/8	55.1	14.3	17.5	16.3	3.8	34.6	46.8	15.9	11.5	13.0
6BCM8[ ]ME	6	1/2	60.7	14.3	22.2	16.3	3.8	34.6	52.3	15.9	11.5	13.0
8BCM4[ ]ME	8	1/4	57.0	15.9	15.9	16.7	5.8	36.6	50.0	17.5	13.1	14.0
10BCM2[ ]ME	10	1/8	54.2	19.1	19.1	17.5	7.8	37.3	46.3	19.1	16.5	14.0
10BCM4[ ]ME	10	1/4	59.0	19.1	19.1	17.5	6.6	37.3	51.1	19.1	16.5	14.0
10BCM6[ ]ME	10	3/8	59.0	19.1	19.1	17.5	7.9	37.3	51.1	19.1	16.5	14.0
12BCM6[ ]ME	12	3/8	66.0	22.2	23.8	24.6	9.9	43.7	54.1	23.8	19.5	16.0
12BCM8[ ]ME	12	1/2	69.9	22.2	23.8	24.6	9.9	43.7	57.9	23.8	19.5	16.0
14BCM8[ ]ME	14	1/2	72.0	23.8	23.8	22.2	11.9	41.1	59.0	23.8	19.5	16.0
16BCM8[ ]ME	16	1/2	70.7	25.4	27.0	25.0	12.7	43.7	59.5	27.0	22.5	14.0
18BCM8[ ]ME	18	1/2	76.0	28.6	30.0	25.4	12.7	48.0	64.0	30.2	26.0	17.0
22BCM8[ ]ME	22	1/2	81.0	31.8	33.5	27.0	12.7	53.0	68.0	33.3	29.5	24.0
25BCM8[ ]ME	25	1/2	88.0	38.1	40.0	33.3	12.7	60.0	73.0	39.7	33.8	24.0

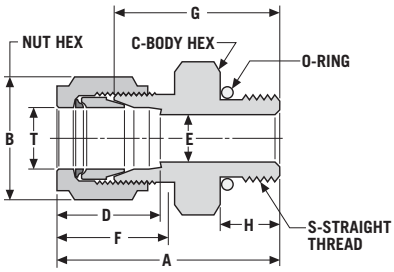

Male Connector, SAE: CMS

connects fractional tube to SAE straight thread boss

Part Number*	T	S	A	B Hex Flat	C Hex Flat	D	E	F	G	H	O-ring Uniform Size #
			Dimensions — inches								
2CMS2[ ]	1/8	5/16-24	1.25	7/16	7/16	.56	.09	.67	.94	.30	902
4CMS4[ ]	1/4	7/16-20	1.41	9/16	9/16	.64	.19	.77	1.08	.36	904
4CMS6[ ]	1/4	9/16-18	1.47	9/16	11/16	.64	.19	.77	1.14	.39	906
4CMS8[ ]	1/4	3/4-16	1.55	9/16	7/8	.64	.19	.77	1.22	.44	908
4CMS10[ ]	1/4	7/8-14	1.67	9/16	1	.64	.19	.77	1.34	.50	910
6CMS4[ ]	3/8	7/16-20	1.56	11/16	3/4	.72	.19	.83	1.22	.36	904
6CMS6[ ]	3/8	9/16-18	1.63	11/16	3/4	.72	.28	.83	1.27	.39	906
6CMS8[ ]	3/8	3/4-16	1.61	11/16	7/8	.72	.28	.83	1.27	.44	908
6CMS10[ ]	3/8	7/8-14	1.73	11/16	1	.72	.28	.83	1.38	.50	910
8CMS6[ ]	1/2	9/16-18	1.72	7/8	13/16	.97	.30	.92	1.25	.39	906
8CMS8[ ]	1/2	3/4-16	1.70	7/8	7/8	.97	.42	.92	1.25	.44	908
8CMS12[ ]	1/2	1 1/16-12	1.98	7/8	1 1/4	.97	.42	.92	1.52	.59	912
10CMS10[ ]	5/8	7/8-14	1.83	1	1	1	.50	.92	1.39	.50	910
12CMS8[ ]	3/4	3/4-16	1.91	1 1/8	1 1/16	1	.42	.97	1.45	.44	908
12CMS12[ ]	3/4	1 1/16-12	2.03	1 1/8	1 1/4	1	.66	.97	1.59	.59	912
16CMS12[ ]	1	1 1/16-12	2.19	1 1/2	1 3/8	1.31	.66	1.08	1.63	.59	912
16CMS16[ ]	1	1 5/16-12	2.25	1 1/2	1 1/2	1.31	.88	1.08	1.69	.59	916
20CMS20[ ]	1 1/4	1 5/8-12	2.69	1 7/8	1 7/8	1.62	1.09	1.53	1.82	.59	920
24CMS24[ ]	1 1/2	1 7/8-12	3.06	2 1/4	2 1/8	1.97	1.34	1.78	1.99	.59	924
32CMS32[ ]	2	2 1/2-12	4	3	2 3/4	2.66	1.81	2.47	2.53	.59	932

To specify O-ring material for SAE fittings, see page 10.

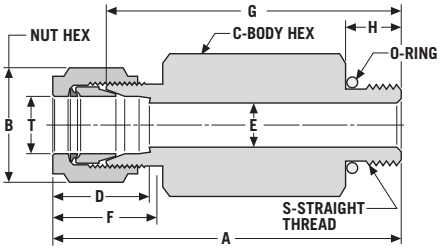

Long Male Connector, SAE: LCMS

connects fractional tube to SAE straight thread boss

Part Number*	T Tube O.D.	S	A	B Hex Flat	C Hex Flat	D	E	F	G	H	O-ring Uniform Size #
			Dimensions — inches								
4LCMS4[ ]	1/4	7/16-20	2.30	9/16	9/16	.64	.19	.77	1.97	.36	904
6LCMS6[ ]	3/8	9/16-18	2.55	11/16	3/4	.72	.28	.83	2.19	.39	906
8LCMS8[ ]	1/2	3/4-16	3.05	7/8	7/8	.97	.42	.92	2.58	.44	908
12LCMS12[ ]	3/4	1 1/16-12	3.92	1 1/8	1 1/4	1	.66	.97	3.48	.59	912
16LCMS16[ ]	1	1 5/16-12	4.42	1 1/2	1 1/2	1.31	.88	1.08	3.86	.59	916

* [ ] see page 9 for material specifications.

O-ring Installation Instructions

GYROLOK® O-ring seal fittings are used for direct connection to existing pipe thread or straight thread ports—which have a smooth, flat surface perpendicular to the threaded port. O-ring seal fittings provide leak-tight sealing on both vacuum and high pressure systems. In the pipe thread version, a special short thread insures against thread interference.

The standard Buna N O-ring is completely contained in a precision groove, to prevent O-ring extrusion at high pressure. The precision groove also provides a controlled squeeze for a vacuum-tight seal.

The chart lists pertinent dimensions useful with O-ring seal connectors and adapters.

Note: When installing an O-ring port:

1. Hand-thread until the O-ring compresses on the port end.
2. Snug the fitting to the port with a wrench to completely compress the O-ring.
3. Always use a back-up wrench to hold the O-ring seal fitting body, when connecting or disconnecting a GYROLOK® end.

To specify O-ring material, see page 10.

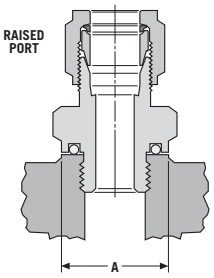

Fig. 1

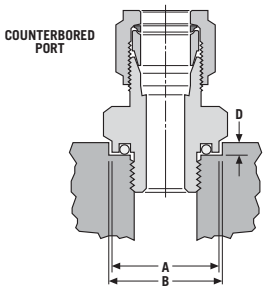

Fig. 2

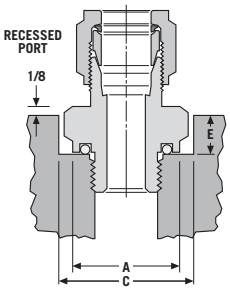

Fig. 3

Mounting Dimensions For O-ring Seal Connectors and Adapters

Straight Thread Size*	Pipe Thread Size**	A Min. Flat for Sealing	Diameter B Min. for Clearance (Fig. 2)	C Min. for Clearance (Fig. 3)	Depth D Max. (Fig. 2)	E Max. for Adapter (Fig. 3)
5/16-24	—	1/2	9/16	21/32	3/32	3/32
3/8-24	—	17/32	21/32	3/4	3/32	1/8
7/16-20	—	11/16	25/32	7/8	3/32	5/32
1/2-20	—	3/4	29/32	1 1/32	3/32	11/64
9/16-18	—	13/16	31/32	1 3/32	3/32	11/64
3/4-16	—	1	1 5/32	1 5/16	3/32	7/32
7/8-14	—	1 7/32	1 11/32	1 17/32	3/32	5/16
1 1/16-12	—	1 13/32	1 17/32	1 3/4	3/32	11/32
1 5/16-12	—	1 11/16	1 25/32	2 1/32	3/32	7/16
—	1/8 NPT	11/16	25/32	7/8	3/32	9/64
—	1/4 NPT	13/16	31/32	1 3/32	3/32	11/64
—	3/8 NPT	1	1 5/32	1 5/16	3/32	3/16
—	1/2 NPT	1 7/32	1 11/32	1 17/32	3/32	5/16
—	3/4 NPT	1 13/32	1 17/32	1 3/4	3/32	3/8
—	1 NPT	1 11/16	1 25/32	2 1/32	3/32	27/64

Dimensions for reference only. Subject to change in inches.

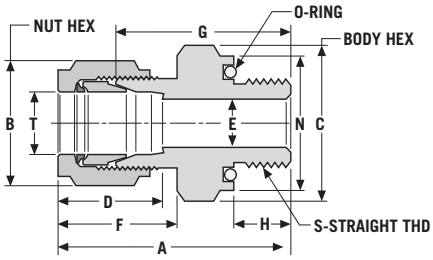

O-ring Straight Connector: COS

connects fractional tube to female straight thread

Part Number*	T Tube O.D.	S Thread Size	A	B Hex Flat	C Hex Flat	D	E	F	G	H	N	O-ring I.D.	O-ring O.D.
			Dimensions — inches										
1COS[ ]	1/16	5/16-24	1.13	5/16	9/16	.41	.05	.48	.91	.34	.56	.31	.44
2COS[ ]	1/8	5/16-24	1.25	7/16	9/16	.56	.09	.67	1.03	.34	.56	.31	.44
3COS[ ]	3/16	3/8-24	1.41	1/2	5/8	.59	.13	.70	1.09	.38	.63	.38	.50
4COS[ ]	1/4	7/16-20	1.55	9/16	3/4	.64	.19	.77	1.22	.41	.75	.44	.63
6COS[ ]	3/8	9/16-18	1.72	11/16	15/16	.72	.28	.83	1.38	.47	.94	.56	.75
8COS6[ ]	1/2	9/16-18	1.88	7/8	15/16	.97	.30	.92	1.41	.47	.94	.58	.78
8COS[ ]	1/2	3/4-16	1.88	7/8	1 1/8	.97	.42	.92	1.41	.47	1.13	.75	.94
10COS[ ]	5/8	7/8-14	1.94	1	1 5/16	1	.50	.92	1.50	.47	1.31	.88	1.13
12COS[ ]	3/4	1 1/16-12	2.09	1 1/8	1 1/2	1	.66	.97	1.66	.56	1.50	1.06	1.31
14COS[ ]	7/8	1 1/16-12	2.09	1 1/4	1 1/2	1.06	.72	.97	1.66	.56	1.50	1.06	1.31
16COS[ ]	1	1 5/16-12	2.38	1 1/2	1 3/4	1.31	.88	1.08	1.81	.56	1.75	1.31	1.56

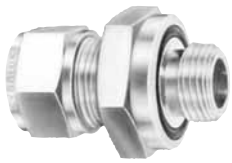

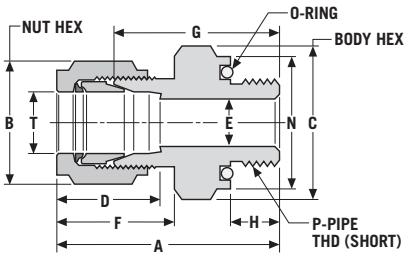

O-ring Male Connector: COM

connects fractional tube to female NPT threads

Part Number*	T Tube O.D.	P Pipe Thd.	A	B Hex Flat	C Hex Flat	D	E	F	G	H	N	O-ring I.D.	O-ring O.D.
			Dimensions — inches										
1COM2[ ]	1/16	1/8	1.06	5/16	3/4	.41	.05	.48	.84	.28	.75	.44	.63
2COM2[ ]	1/8	1/8	1.34	7/16	3/4	.56	.09	.67	1.03	.28	.75	.44	.63
2COM4[ ]	1/8	1/4	1.47	7/16	15/16	.56	.09	.67	1.16	.38	.94	.56	.75
3COM2[ ]	3/16	1/8	1.38	1/2	3/4	.59	.13	.70	1.06	.28	.75	.44	.63
3COM4[ ]	3/16	1/4	1.50	1/2	15/16	.59	.13	.70	1.19	.38	.94	.56	.75
4COM2[ ]	1/4	1/8	1.42	9/16	3/4	.64	.19	.77	1.09	.28	.75	.44	.63
4COM4[ ]	1/4	1/4	1.55	9/16	15/16	.64	.19	.77	1.22	.38	.94	.56	.75
4COM6[ ]	1/4	3/8	1.61	9/16	1 1/8	.64	.19	.77	1.28	.41	1.13	.75	.94
6COM2[ ]	3/8	1/8	1.50	11/16	3/4	.72	.19	.83	1.16	.28	.75	.44	.63
6COM4[ ]	3/8	1/4	1.63	11/16	15/16	.72	.28	.83	1.28	.38	.94	.56	.75
6COM6[ ]	3/8	3/8	1.69	11/16	1 1/8	.72	.28	.83	1.34	.41	1.13	.75	.94
6COM8[ ]	3/8	1/2	1.91	11/16	1 5/16	.72	.28	.83	1.56	.53	1.31	.88	1.13
8COM4[ ]	1/2	1/4	1.75	7/8	15/16	.97	.28	.92	1.28	.38	.94	.56	.75
8COM6[ ]	1/2	3/8	1.81	7/8	1 1/8	.97	.41	.92	1.34	.41	1.13	.75	.94
8COM8[ ]	1/2	1/2	2.03	7/8	1 5/16	.97	.41	.92	1.56	.53	1.31	.88	1.13
10COM8[ ]	5/8	1/2	2	1	1 5/16	1	.50	.92	1.56	.53	1.31	.88	1.13
10COM12[ ]	5/8	3/4	2.09	1	1 1/2	1	.50	.92	1.66	.56	1.50	1.06	1.31
12COM8[ ]	3/4	1/2	2	1 1/8	1 5/16	1	.55	.97	1.56	.53	1.31	.88	1.13
12COM12[ ]	3/4	3/4	2.09	1 1/8	1 1/2	1	.63	.97	1.66	.56	1.50	1.06	1.31
16COM12[ ]	1	3/4	2.31	1 1/2	1 1/2	1.31	.63	1.08	1.75	.56	1.50	1.06	1.31
16COM16[ ]	1	1	2.38	1 1/2	1 3/4	1.31	.88	1.08	1.91	.66	1.75	1.31	1.56

* [ ] see page 9 for material specifications.

Dimensions for reference only. Subject to change.

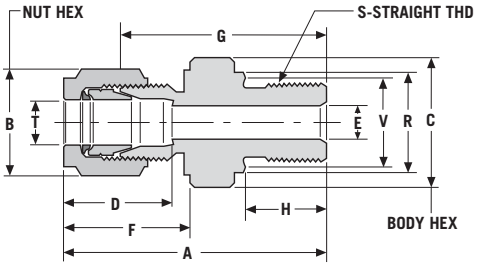

Male Connector: CM/EB

connects fractional tube with RP parallel threads

Part Number*	T Tube O.D.	S Thd. Size	A	B	C	D	E	F	G	H	R	V
			Dimensions — inches									
2CM2[ ]EB	1/8	1/8	1.25	7/16	5/8	.56	.09	.67	.94	.31	.55	.52
2CM4[ ]EB	1/8	1/4	1.42	7/16	3/4	.56	.09	.67	1.11	.47	.70	.67
4CM2[ ]EB	1/4	1/8	1.34	9/16	5/8	.64	.19	.77	1.02	.31	.55	.52
4CM4[ ]EB	1/4	1/4	1.52	9/16	3/4	.64	.19	.77	1.19	.47	.70	.67
4CM6[ ]EB	1/4	3/8	1.55	9/16	15/16	.64	.19	.77	1.22	.47	.86	.83
4CM8[ ]EB	1/4	1/2	1.67	9/16	1 1/16	.64	.19	.77	1.34	.55	1.03	.98
6CM4[ ]EB	3/8	1/4	1.61	11/16	3/4	.72	.28	.83	1.23	.47	.70	.67
6CM6[ ]EB	3/8	3/8	1.64	11/16	15/16	.72	.28	.83	1.27	.47	.86	.83

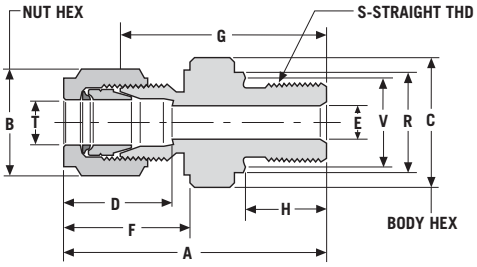

Male Connector: CM/MB

connects metric tube with RP parallel threads

Part Number*	T Tube O.D.	S Straight Thd.	A	B Hex Flat	C Hex Flat	D	E	F	G	H	R	V
			Dimensions—mm									
3CM2[ ]MB	3	1/8	32.8	11.1	14.3	14.3	2.2	17.1	24.9	8.0	14.0	13.0
3CM4[ ]MB	3	1/4	37.2	11.1	19.1	14.3	2.2	17.1	29.2	12.0	18.0	17.0
6CM2[ ]MB	6	1/8	35.8	14.3	14.3	16.3	3.8	19.5	27.4	8.0	14.0	13.0
6CM4[ ]MB	6	1/4	40.1	14.3	19.1	16.3	3.8	19.5	31.8	12.0	18.0	17.0
6CM6[ ]MB	6	3/8	40.1	14.3	22.2	16.3	3.8	19.5	31.8	12.0	22.0	21.0
6CM8[ ]MB	6	1/2	43.4	14.3	27.0	16.3	3.8	19.5	35.1	14.0	26.0	25.0
8CM2[ ]MB	8	1/8	34.7	15.9	14.3	16.7	4.6	19.1	26.7	8.0	14.0	13.0
8CM4[ ]MB	8	1/4	39.5	15.9	19.1	16.7	5.8	19.1	31.5	12.0	18.0	17.0
8CM6[ ]MB	8	3/8	40.5	15.9	22.0	16.7	5.8	19.1	32.5	12.0	22.0	21.0
8CM8[ ]MB	8	1/2	43.1	15.9	27.0	16.7	5.8	19.1	35.1	14.0	26.0	25.0
8CM12[ ]MB	8	3/4	45.0.	15.9	33.5	16.7	6.0	19.1	37.0	12.0	32.0	30.0
10CM2[ ]MB	10	1/8	36.9	19.1	17.5	17.5	4.6	19.8	29.0	8.0	14.0	13.0
10CM4[ ]MB	10	1/4	41.0	19.1	19.1	17.5	5.8	19.8	33.0	12.0	18.0	17.0
10CM6[ ]MB	10	3/8	41.5	19.1	24.0	17.5	7.4	19.8	33.5	12.0	22.0	21.0
10CM8[ ]MB	10	1/2	44.1	19.1	27.0	17.5	7.9	19.8	36.1	14.0	26.0	25.0
12CM4[ ]MB	12	1/4	44.5	22.2	22.2	24.6	7.0	23.4	32.5	12.0	18.0	17.0
12CM6[ ]MB	12	3/8	45.0	22.2	24.0	24.6	10.0	23.4	33.0	12.0	22.0	21.0
12CM8[ ]MB	12	1/2	47.5	22.2	27.0	24.6	9.9	23.4	35.6	14.0	26.0	25.0
12CM12[ ]MB	12	3/4	49.5	22.2	33.3	24.6	9.9	23.4	37.6	16.0	32.0	30.0
14CM4[ ]MB	14	1/4	41.9	23.8	22.2	22.2	7.0	21.0	32.5	12.0	18.0	17.0
14CM6[ ]MB	14	3/8	42.4	23.8	.22.2	22.2	9.9	21.0	33.0	12.0	22.0	21.0
14CM8[ ]MB	14	1/2	45.2	23.8	27.0	22.2	11.9	21.0	35.8	14.0	26.0	25.0
15CM8[ ]MB	15	1/2	46.6	23.8	27.0	22.2	12.7	21.8	36.3	14.0	26.0	25.0
16CM6[ ]MB	16	3/8	44.9	25.4	23.8	25.0	9.9	23.4	33.8	12.0	22.0	21.0
16CM8[ ]MB	16	1/2	47.5	25.4	27.0	25.0	12.7	23.4	36.3	14.0	26.0	25.0
16CM12[ ]MB	16	3/4	49.5	25.4	33.3	25.0	12.7	23.4	38.4	16.0	32.0	30.0
18CM8[ ]MB	18	1/2	47.3	28.6	27.0	25.4	12.7	24.6	37.3	14.0	26.0	25.0
18CM12[ ]MB	18	3/4	49.1	28.6	33.3	25.4	15.8	24.6	37.1	16.0	32.0	30.0
20CM8[ ]MB	20	1/2	52.5	31.8	30.2	31.0	11.9	27.0	38.6	14.0	26.0	25.0
22CM8[ ]MB	22	1/2	50.6	31.8	30.2	27.0	12.6	24.6	39.4	14.0	26.0	25.0
22CM12[ ]MB	22	3/4	52.6	31.8	33.3	27.0	17.9	24.6	41.4	16.0	32.0	30.0
22CM16[ ]MB	22	1	54.6	31.8	41.3	27.0	17.9	24.6	43.4	18.0	39.0	37.0
25CM12[ ]MB	25	3/4	59.9	38.1	34.9	33.3	18.1	27.4	45.5	16.0	32.0	30.0
25CM16[ ]MB	25	1	57.6	38.1	41.3	33.3	21.7	27.4	43.2	18.0	39.0	37.0

RP parallel thread ends are typically used with a flat gasket to seal.

* [ ] see page 9 for material specifications.

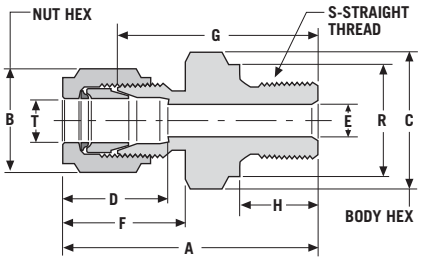

Male Connector: CM/EA

connects fractional tube with RS parallel threads

Part Number*	T Tube O.D.	S Thd. Size	A	B	C	D	E	F	G	H	R
			Dimensions — inches								
2CM2[ ]EA	1/8	1/8	1.19	7/16	9/16	.56	.09	.67	.72	.31	.55
2CM4[ ]EA	1/8	1/4	1.41	7/16	3/4	.56	.09	.67	1.09	.47	.70
2CM6[ ]EA	1/8	3/8	1.47	7/16	7/8	.56	.09	.67	1.16	.47	.86
4CM2[ ]EA	1/4	1/8	1.30	9/16	9/16	.64	.19	.77	.97	.31	.55
4CM4[ ]EA	1/4	1/4	1.48	9/16	3/4	.64	.19	.77	1.16	.47	.70
4CM6[ ]EA	1/4	3/8	1.55	9/16	7/8	.64	.19	.77	1.22	.47	.86
4MC8[ ]EA	1/4	1/2	1.67	9/16	1 1/16	.64	.19	.77	1.34	.55	1.03
6CM4[ ]EA	3/8	1/4	1.61	11/16	3/4	.72	.28	.83	1.25	.47	.70
6CM6[ ]EA	3/8	3/8	1.61	11/16	7/8	.72	.28	.83	1.25	.47	.86
6CM8[ ]EA	3/8	1/2	1.73	11/16	1 1/16	.72	.28	.83	1.38	.55	1.03
8CM4[ ]EA	1/2	1/4	1.75	7/8	13/16	.97	.23	.92	1.25	.47	.70
8CM6[ ]EA	1/2	3/8	1.75	7/8	7/8	.97	.23	.92	1.25	.47	.86
8CM8[ ]EA	1/2	1/2	1.72	7/8	1 1/16	.97	.23	.92	1.38	.55	1.03
12CM8[ ]EA	3/4	1/2	1.88	1 1/8	1 1/16	1	.39	.97	1.50	.55	1.03
12CM12[ ]EA	3/4	3/4	1.92	1 1/8	1 5/16	1	.39	.97	1.48	.63	1.27
16CM8[ ]EA	1	1/2	2	1 1/2	1 3/8	1.31	.47	1.08	1.44	.55	1.03
16CM16[ ]EA	1	1	2.23	1 1/2	1 5/8	1.31	.70	1.08	1.67	.70	1.53

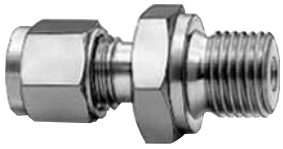

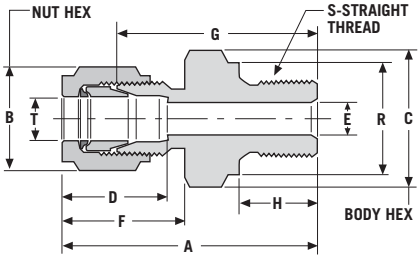

Male Connector: CM/MA

connects metric tube with RS parallel threads

Part Number*	T Tube Size	S Thd. Size	A	B Hex Flat	C Hex Flat	D	E	F	G	H	R
			Dimensions — mm								
3CM2[ ]MA	3	1/8	32.8	11.1	14.3	14.3	2.2	17.1	24.9	8.0	14.0
3CM4[ ]MA	3	1/4	37.2	11.1	19.1	14.3	2.2	17.1	29.2	12.0	18.0
6CM2[ ]MA	6	1/8	35.8	14.3	14.3	16.3	3.8	19.5	27.4	8.0	14.0
6CM4[ ]MA	6	1/4	40.1	14.3	19.1	16.3	3.8	19.5	31.8	12.0	18.0
6CM6[ ]MA	6	3/8	40.1	14.3	22.2	16.3	3.8	19.5	31.8	12.0	22.0
6CM8[ ]MA	6	1/2	43.4	14.3	27.0	16.3	3.8	19.5	35.1	14.0	26.0
8CM2[ ]MA	8	1/8	34.7	15.9	14.3	16.7	5.8	19.1	26.7	8.0	14.0
8CM4[ ]MA	8	1/4	39.5	15.9	19.1	16.7	5.8	19.1	31.5	12.0	18.0
8CM6[ ]MA	8	3/8	43.0	15.9	22.0	16.7	5.8	19.1	35.0	12.0	22.0
8CM8[ ]MA	8	1/2	43.1	15.9	27.0	16.7	5.8	19.1	35.0	14.0	26.0
8CM12[ ]MA	8	3/4	48.0	15.9	33.0	16.7	6.5	19.1	38.0	12.0	32.0
10CM2[ ]MA	10	1/8	37.0	19.1	17.5	17.5	4.6	19.8	29.0	8.0	14.0
10CM4[ ]MA	10	1/4	41.0	19.1	19.0	17.5	5.8	19.8	33.0	12.0	18.0
10CM6[ ]MA	10	3/8	44.0	19.1	22.0	17.5	6.0	19.8	36.0	12.0	22.0
10CM8[ ]MA	10	1/2	44.1	19.1	27.0	17.5	7.9	19.8	36.1	14.0	26.0
12CM4[ ]MA	12	1/4	44.5	22.2	22.2	24.6	5.8	23.4	32.5	12.0	18.0
12CM6[ ]MA	12	3/8	47.5	22.2	22.0	24.6	6.0	23.4	35.5	12.0	22.0
12CM8[ ]MA	12	1/2	47.5	22.2	27.0	24.6	9.9	23.4	35.6	14.0	26.0
12CM12[ ]MA	12	3/4	49.5	22.2	33.3	24.6	9.9	23.4	37.6	16.0	33.0
14CM4[ ]MA	14	1/4	41.9	23.8	22.2	22.2	5.8	21.0	32.5	12.0	18.0
14CM6[ ]MA	14	3/8	42.4	23.8	.22.2	22.2	7.8	21.0	33.0	12.0	22.0
14CM8[ ]MA	14	1/2	45.2	23.8	27.0	22.2	11.9	21.0	35.8	14.0	26.0
15CM8[ ]MA	15	1/2	46.6	23.8	27.0	22.2	12.7	21.8	36.3	14.0	26.0
16CM6[ ]MA	16	3/8	45.0	25.4	23.8	25.0	7.8	23.4	33.8	12.0	22.0
16CM8[ ]MA	16	1/2	47.5	25.4	27.0	25.0	12.7	23.4	36.3	14.0	26.0
16CM12[ ]MA	16	3/4	49.5	25.4	33.3	25.0	12.7	23.4	38.4	16.0	32.0
18CM8[ ]MA	18	1/2	47.3	28.6	27.0	25.4	11.4	24.6	37.3	14.0	26.0
18CM12[ ]MA	18	3/4	49.1	28.6	33.3	25.4	15.3	24.6	39.1	16.0	32.0
20CM8[ ]MA	20	1/2	52.5	31.8	30.2	31.0	11.9	27.0	38.6	14.0	26.0
22CM8[ ]MA	22	1/2	50.6	31.8	30.2	27.0	11.4	24.6	39.4	14.0	26.0
22CM12[ ]MA	22	3/4	52.6	31.8	33.3	27.0	15.8	24.6	41.4	16.0	32.0
22CM16[ ]MA	22	1	54.6	31.8	41.3	27.0	17.9	24.6	43.4	18.0	39.0
25CM12[ ]MA	25	3/4	59.9	38.1	34.9	33.3	17.9	27.4	45.5	16.0	32.0
25CM16[ ]MA	25	1	57.6	38.1	41.3	33.3	17.9	27.4	43.2	18.0	39.0

RS parallel thread ends are typically used with a gasket having a bonded elastomer seal. RP-type gaskets may also be used.

* [ ] see page 9 for material specifications.

Dimensions for reference only. Subject to change.

Male Elbow: LM

connects fractional tube to female NPT thread

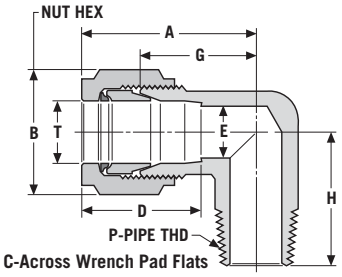

Part Number*	T Tube O.D.	P Male NPT Size	Dimensions — inches A	B Hex Flat	C	D	E	G	H
1LM1[ ]	1/16	1/16	.78	5/16	7/16	.41	.05	.56	.72
1LM2[ ]	1/16	1/8	.78	5/16	7/16	.41	.05	.56	.88
2LM1[ ]	1/8	1/16	.97	7/16	7/16	.56	.09	.66	.72
2LM2[ ]	1/8	1/8	.97	7/16	7/16	.56	.09	.66	.72
2LM4[ ]	1/8	1/4	1.09	7/16	1/2	.56	.09	.78	.94
3LM2[ ]	3/16	1/8	1	1/2	7/16	.59	.13	.69	.75
3LM4[ ]	3/16	1/4	1	1/2	1/2	.59	.13	.72	.94
4LM2[ ]	1/4	1/8	1.05	9/16	7/16	.64	.19	.72	.78
4LM4[ ]	1/4	1/4	1.11	9/16	1/2	.64	.19	.78	1
4LM6[ ]	1/4	3/8	1.20	9/16	11/16	.64	.19	.88	1.13
4LM8[ ]	1/4	1/2	1.33	9/16	13/16	.64	.42	1	1.25
6LM2[ ]	3/8	1/8	1.19	11/16	1/2	.72	.28	.84	.88
6LM4[ ]	3/8	1/4	1.19	11/16	1/2	.72	.28	.84	1
6LM6[ ]	3/8	3/8	1.28	11/16	11/16	.72	.28	.94	1.13
6LM8[ ]	3/8	1/2	1.38	11/16	13/16	.72	.28	1.03	1.25
8LM4[ ]	1/2	1/4	1.44	7/8	11/16	.97	.30	.97	1.13
8LM6[ ]	1/2	3/8	1.44	7/8	11/16	.97	.41	.97	1.13
8LM8[ ]	1/2	1/2	1.50	7/8	11/16	.97	.42	1.03	1.31
8LM12[ ]	1/2	3/4	1.56	7/8	1	.97	.72	1.06	1.50
10LM6[ ]	5/8	3/8	1.47	1	13/16	1	.41	1.03	1.25
10LM8[ ]	5/8	1/2	1.47	1	13/16	1	.50	1.03	1.38
12LM8[ ]	3/4	1/2	1.59	1 1/8	1	1	.50	1.16	1.50
12LM12[ ]	3/4	3/4	1.59	1 1/8	1	1	.66	1.16	1.50
14LM12[ ]	7/8	3/4	1.72	1 1/4	1 1/4	1.06	.72	1.28	1.50
16LM12[ ]	1	3/4	1.88	1 1/2	1 1/4	1.31	.72	1.31	1.66
16LM16[ ]	1	1	1.88	1 1/2	1 1/4	1.31	.88	1.31	1.84
20LM20[ ]	1 1/4	1 1/4	2.62	1 7/8	1 11/16	1.53	1.09	1.75	1.88
24LM24[ ]	1 1/2	1 1/2	3.07	2 1/4	2	1.78	1.34	2	2.38
32LM32[ ]	2	2	4.22	3	2 3/4	2.47	1.81	2.75	2.78

Male Elbow: LM/ME, LM/MC

connects metric tube with NPT or RT tapered threads

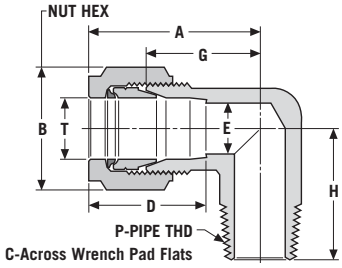

Part Number* NPT Threads	RT Threads	T Tube O.D.	P Male NPT Size	Dimensions — mm A	B Hex Flat	C	D	E
3LM2[ ]ME	3LM2[ ]MC	3	1/8	24.7	11.1	11.0	14.3	2.2
3LM4[ ]ME	3LM4[ ]MC	3	1/4	27.8	11.1	13.7	14.3	2.2
4LM2[ ]ME	4LM2[ ]MC	4	1/8	25.3	12.7	11.7	15.1	2.3
4LM4[ ]ME	4LM4[ ]MC	4	1/4	25.3	12.7	13.7	15.1	2.3
6LM2[ ]ME	6LM2[ ]MC	6	1/8	26.3	14.3	11.7	16.3	3.8
6LM4[ ]ME	6LM4[ ]MC	6	1/4	28.2	14.3	13.7	16.3	3.8
6LM6[ ]ME	6LM6[ ]MC	6	3/8	30.6	14.3	17.2	16.3	3.8
6LM8[ ]ME	6LM8[ ]MC	6	1/2	33.8	14.3	21.3	16.3	3.8
8LM2[ ]ME	8LM2[ ]MC	8	1/8	28.6	15.9	12.7	16.7	5.8
8LM4[ ]ME	8LM4[ ]MC	8	1/4	28.6	15.9	13.7	16.7	5.8
8LM6[ ]ME	8LM6[ ]MC	8	3/8	31.0	15.9	17.2	16.7	5.8
8LM8[ ]ME	8LM8[ ]MC	8	1/2	34.2	15.9	21.4	16.7	5.8
10LM2[ ]ME	10LM2[ ]MC	10	1/8	31.9	19.1	17.5	17.5	4.6
10LM4[ ]ME	10LM4[ ]MC	10	1/4	32.6	19.1	17.8	17.5	7.1
10LM6[ ]ME	10LM6[ ]MC	10	3/8	31.8	19.1	17.2	17.5	7.9
10LM8[ ]ME	10LM8[ ]MC	10	1/2	34.1	19.1	21.3	17.5	7.9
12LM4[ ]ME	12LM4[ ]MC	12	1/4	36.6	22.2	17.8	24.6	7.1
12LM6[ ]ME	12LM6[ ]MC	12	3/8	36.6	22.2	17.8	24.6	9.9
12LM8[ ]ME	12LM8[ ]MC	12	1/2	38.1	22.2	21.3	24.6	9.9
12LM12[ ]ME	12LM12[ ]MC	12	3/4	41.3	22.2	26.7	24.6	9.9
14LM6[ ]ME	14LM6[ ]MC	14	3/8	35.6	23.8	20.6	22.2	10.2
14LM8[ ]ME	14LM8[ ]MC	14	1/2	35.6	23.8	22.6	22.2	11.9
15LM8[ ]ME	15LM8[ ]MC	15	1/2	36.5	23.8	20.7	22.2	12.7
16LM6[ ]ME	16LM6[ ]MC	16	3/8	37.3	25.4	20.6	25.0	10.2
16LM8[ ]ME	16LM8[ ]MC	16	1/2	37.3	25.4	21.5	25.0	12.7
16LM12[ ]ME	16LM12[ ]MC	16	3/4	40.6	25.4	26.7	25.0	12.7
18LM8[ ]ME	18LM8[ ]MC	18	1/2	39.5	28.6	24.9	25.4	12.7
18LM12[ ]ME	18LM12[ ]MC	18	3/4	39.3	28.6	25.4	25.4	15.8
20LM8[ ]ME	20LM8[ ]MC	20	1/2	46.4	31.8	31.8	31.0	12.7
20LM12[ ]ME	20LM12[ ]MC	20	3/4	46.4	31.8	31.8	31.0	16.7
22LM8[ ]ME	22LM8[ ]MC	22	1/2	43.7	31.8	31.8	27.0	12.6
22LM12[ ]ME	22LM12[ ]MC	22	3/4	44.5	31.8	31.8	27.0	17.9
22LM16[ ]ME	22LM16[ ]MC	22	1	43.7	31.8	33.3	27.0	17.9
25LM12[ ]ME	25LM12[ ]MC	25	3/4	47.7	38.1	31.8	33.3	18.1
25LM16[ ]ME	25LM16[ ]MC	25	1	47.7	38.1	33.3	33.3	21.7

* [ ] see page 9 for material specifications.

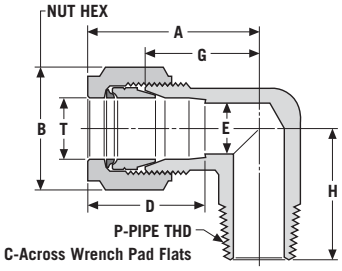

Male Elbow: LM/EC

connects fractional tube with RT tapered threads

Part Number*	T Tube O.D.	P Pipe Thd.	A	B Hex Flat	C	D	E	G	H
			Dimensions — inches						
4LM2[ ]EC	1/4	1/8	1.05	9/16	7/16	.64	.19	.72	.78
4LM4[ ]EC	1/4	1/4	1.11	9/16	1/2	.64	.19	.78	1
8LM4[ ]EC	1/2	1/4	1.44	7/8	11/16	.97	.30	.97	1.13
8LM6[ ]EC	1/2	3/8	1.44	7/8	11/16	.97	.41	.97	1.13
8LM8[ ]EC	1/2	1/2	1.50	7/8	13/16	.97	.42	1.03	1.31

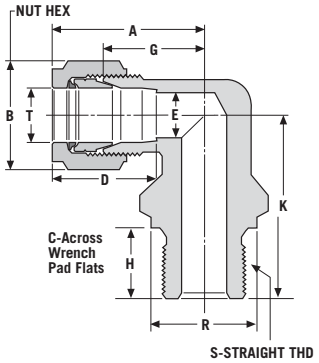

Male Elbow: LM/MA

connects metric with RS parallel threads

Part Number*	T Tube O.D.	S Straight Thd.	A	B Hex Flat	C	D	E	G	H	K	R
			Dimensions—mm								
6LM4[ ]MA	6	1/4	33.0	14.3	17.3	16.3	3.8	24.6	12.0	27.9	18.0
8LM4[ ]MA	8	1/4	34.2	15.9	20.5	16.7	7.6	26.2	12.0	34.3	18.0
10LM4[ ]MA	10	1/4	32.6	19.1	16.7	17.5	5.8	24.6	12.0	28.7	18.0
10LM8[ ]MA	10	1/2	37.2	19.1	20.5	17.5	7.9	29.2	14.0	38.1	26.0
12LM4[ ]MA	12	1/4	38.1	22.2	22.3	24.6	5.8	26.2	12.0	34.3	18.0
12LM8[ ]MA	12	1/2	40.6	22.2	20.5	24.6	9.9	28.7	14.0	38.1	26.0
16LM6[ ]MA	16	3/8	40.6	25.4	26.1	25.0	7.8	29.5	12.0	38.1	22.0
16LM8[ ]MA	16	1/2	40.6	25.4	20.5	25.0	11.8	29.5	14.0	38.1	26.0
22LM12[ ]MA	22	3/4	43.7	31.8	28.5	27.0	15.8	32.5	16.0	44.5	32.0

RS parallel thread ends are typically used with a gasket having a bonded elastomer seal. RP-type gaskets may also be used.

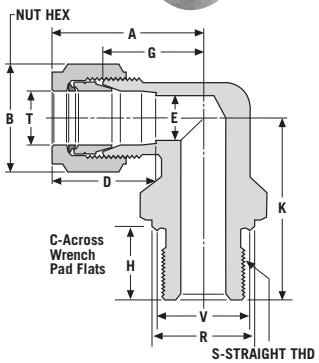

Male Elbow: LM/MB

connects metric with RP parallel threads

Part Number*	T Tube O.D.	S Straight Thd.	A	B Hex Flat	C	D	E	G	H	K	R	V
			Dimensions—mm									
6LM2[ ]MB	6	1/8	29.0	14.3	12.6	16.3	3.8	20.6	8.0	21.8	14.0	13.0
6LM4[ ]MB	6	1/4	29.0	14.3	12.6	16.3	3.8	20.6	12.0	29.0	18.0	17.0

RP parallel thread ends are typically used with a flat gasket to seal.

* [ ] see page 9 for material specifications.

Dimensions for reference only. Subject to change.

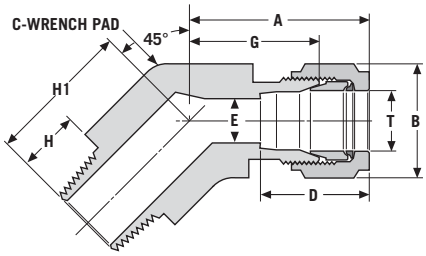

45° Male Elbow: LMF

connects fractional tube to female NPT thread

Part Number*	T Tube O.D.	P Pipe Thd.	A	B	C	D	E	G	H	H1
			Dimensions — inches							
4LMF2[ ]	1/4	1/8	1.05	.56	.50	.64	.19	.72	.38	.78
4LMF4[ ]	1/4	1/4	1.11	.56	.63	.64	.19	.78	.56	1
6LMF2[ ]	3/8	1/8	1.19	.69	.63	.72	.28	.84	.38	.88
6LMF4[ ]	3/8	1/4	1.19	.69	.63	.72	.28	.84	.56	1
6LMF6[ ]	3/8	3/8	1.28	.69	.81	.72	.28	.94	.56	1.13
8LMF6[ ]	1/2	3/8	1.44	.88	.81	.97	.41	.97	.56	1.13
8LMF8[ ]	1/2	1/2	1.53	.88	.94	.97	.42	1.06	.75	1.38

To specify O-ring material for SAE fittings, see page 10.

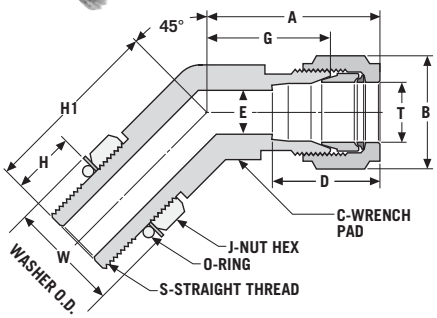

45° Male Elbow, SAE, Positionable: LMFS

connects fractional tube to SAE straight thread boss

Part Number*	T	S	A	B	C	D	E	G	H	H1	J Hex Flat	W	O-ring Uniform Size #
			Dimensions — inches										
4LMFS4[ ]	1/4	7/16-20	1.05	9/16	1/2	.64	.19	.78	.39	1.05	9/16	.66	904
6LMFS6[ ]	3/8	9/16-18	1.19	11/16	5/8	.72	.28	.84	.44	1.14	11/16	.80	906
8LMFS8[ ]	1/2	3/4-16	1.44	7/8	13/16	.97	.42	.97	.50	1.30	7/8	1.02	908
12LMFS12[ ]	3/4	1 1/16-12	1.59	1 1/8	1 1/8	1	.66	1.16	.66	1.73	1 1/4	1.44	912
16LMFS16[ ]	1	1 5/16-12	1.88	1 7/8	1 3/8	1.31	.88	1.31	.66	1.86	1 1/2	1.73	916

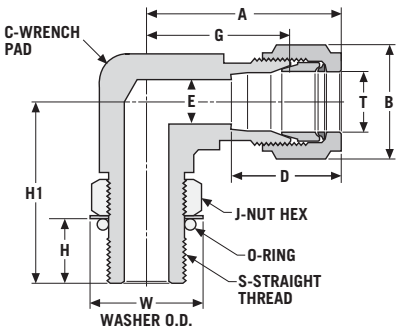

Male Elbow, SAE, Positionable: LMS

connects fractional tube to SAE straight thread boss

Part Number*	T	S	A	B	C	D	E	G	H	H1	J Hex Flat	W	O-ring Uniform Size #
			Dimensions — inches										
4LMS4[ ]	1/4	7/16-20	1.17	9/16	1/2	.64	.19	.84	.39	1.03	9/16	.66	904
4LMS6[ ]	1/4	9/16-18	1.31	9/16	13/16	.64	.19	.98	.44	1.25	11/16	.80	906
6LMS6[ ]	3/8	9/16-18	1.38	11/16	13/16	.72	.28	1.03	.44	1.25	11/16	.80	906
6LMS8[ ]	3/8	3/4-16	1.41	11/16	1	.72	.28	1.06	.50	1.48	7/8	1.02	908
8LMS8[ ]	1/2	3/4-16	1.59	7/8	1	.97	.42	1.13	.50	1.45	7/8	1.02	908
12LMS12[ ]	3/4	1 1/16-12	1.69	1 1/8	1 1/4	1	.66	1.25	.66	1.94	1 1/4	1.44	912
16LMS16[ ]	1	1 5/16-12	1.88	1 1/2	1 1/4	1.31	.88	1.31	.66	2.05	1 1/2	1.73	916
20LMS20[ ]	1 1/4	1 5/8-12	2.67	1 7/8	1 11/16	1.62	1.09	1.80	.66	2.29	1 7/8	2.16	920
24LMS24[ ]	1 1/2	1 7/8-12	3.07	2 1/4	2	1.97	1.34	2	.66	2.38	2 1/8	2.45	924

* [ ] see page 9 for material specifications.

Male Branch: TTM

connects fractional tube to female NPT threads

Part Number*	T Tube O.D.	P Male Pipe Size	A	B Hex Flat	C	D	E	G	H	M
			Dimensions — inches							
1TTM1[ ]	1/16	1/16	1.56	5/16	7/16	.41	.05	.56	.72	.78
2TTM2[ ]	1/8	1/8	1.94	7/16	7/16	.56	.09	.66	.72	.97
2TTM4[ ]	1/8	1/4	2	7/16	1/2	.56	.09	.69	.84	1
3TTM2[ ]	3/16	1/8	2	1/2	7/16	.59	.13	.69	.75	1
4TTM2[ ]	1/4	1/8	2.09	9/16	7/16	.64	.19	.72	.78	1.05
4TTM4[ ]	1/4	1/4	2.22	9/16	1/2	.64	.19	.78	1.03	1.11
6TTM4[ ]	3/8	1/4	2.38	11/16	1/2	.72	.28	.84	1	1.19
6TTM6[ ]	3/8	3/8	2.59	11/16	11/16	.72	.28	.94	1.13	1.30
6TTM8[ ]	3/8	1/2	2.75	11/16	13/16	.72	.28	1.03	1.31	1.38
8TTM4[ ]	1/2	1/4	2.88	7/8	11/16	.97	.28	.97	1	1.44
8TTM6[ ]	1/2	3/8	2.88	7/8	11/16	.97	.41	.97	1.13	1.44
8TTM8[ ]	1/2	1/2	3	7/8	13/16	.97	.42	1.03	1.31	1.50
10TTM6[ ]	5/8	3/8	2.94	1	13/16	1	.41	1.03	1.38	1.47
10TTM8[ ]	5/8	1/2	2.94	1	13/16	1	.50	1.03	1.38	1.47
12TTM8[ ]	3/4	1/2	3.23	1 1/8	1	1	.69	1.16	1.50	1.61
12TTM12[ ]	3/4	3/4	3.19	1 1/8	1	1	.66	1.16	1.50	1.59
14TTM12[ ]	7/8	3/4	3.44	1 1/4	1 1/4	1.06	.72	1.28	1.50	1.72
16TTM12[ ]	1	3/4	3.75	1 1/2	1 1/4	1.31	.72	1.31	1.66	1.88
16TTM16[ ]	1	1	3.75	1 1/2	1 1/4	1.31	.88	1.31	1.84	1.88

Metric fitting shown

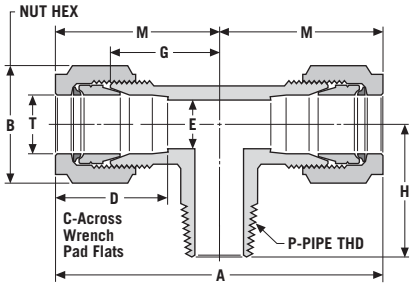

Male Branch Tee: TTM/ME

connects metric tube to female NPT threads

Part Number*	T Tube O.D.	P Male Pipe Thd.	A	B Hex Flat	C	D	E	G	H	M
			Dimensions — mm							
3TTM2[ ]ME	3	1/8	49.4	11.1	11.1	14.3	2.2	16.8	18.3	24.7
4TTM2[ ]ME	4	1/8	50.7	12.7	11.1	15.1	2.3	17.5	19.1	25.4
4TTM4[ ]ME	4	1/4	50.7	12.7	12.7	15.1	2.3	17.5	21.3	25.4
6TTM2[ ]ME	6	1/8	53.3	14.3	11.1	16.3	3.8	18.3	19.8	26.7
6TTM4[ ]ME	6	1/4	56.3	14.3	12.7	16.3	3.8	19.8	26.2	28.2
6TTM6[ ]ME	6	3/8	61.4	14.3	17.5	16.3	3.8	22.4	28.7	30.7
8TTM2[ ]ME	8	1/8	57.2	15.9	12.7	16.7	4.7	20.6	20.6	28.6
8TTM4[ ]ME	8	1/4	57.2	15.9	12.7	16.7	5.9	20.6	25.4	28.6
8TTM6[ ]ME	8	3/8	62.2	15.9	17.5	16.7	5.9	23.1	28.7	31.1
8TTM8[ ]ME	8	1/2	68.3	15.9	20.7	16.7	5.9	26.2	33.3	34.2
10TTM2[ ]ME	10	1/8	65.2	19.1	17.5	17.5	4.7	24.6	25.4	32.6
10TTM4[ ]ME	10	1/4	65.2	19.1	12.7	17.5	7.5	24.6	25.4	32.6
10TTM6[ ]ME	10	3/8	65.2	19.1	17.5	17.5	8.0	24.6	28.7	32.6
10TTM8[ ]ME	10	1/2	68.3	19.1	20.7	17.5	8.0	26.2	33.3	34.1
12TTM4[ ]ME	12	1/4	73.2	22.2	17.5	24.6	7.5	24.6	28.7	36.6
12TTM6[ ]ME	12	3/8	73.2	22.2	17.5	24.6	10.0	24.6	28.7	36.6
12TTM8[ ]ME	12	1/2	76.2	22.2	20.7	24.6	10.0	26.2	33.3	38.1

* [ ] see page 9 for material specifications.

Dimensions for reference only. Subject to change.

Male Run Tee: TMT

connects fractional tube to female NPT thread

Metric fitting shown

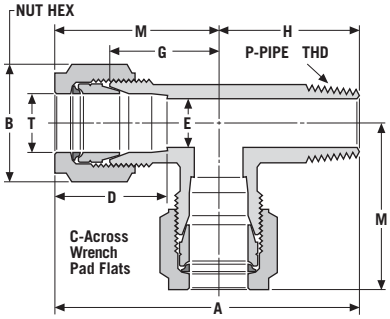

Part Number*	T Tube O.D.	P Male NPT Size	Dimensions — inches A	B Hex Flat	C	D	E	G	H	M
1TMT1[ ]	1/16	1/16	1.50	5/16	7/16	.41	.05	.56	.72	.78
2TMT2[ ]	1/8	1/8	1.69	7/16	7/16	.56	.09	.66	.72	.97
3TMT2[ ]	3/16	1/8	1.75	1/2	7/16	.59	.13	.69	.75	1
4TMT2[ ]	1/4	1/8	1.83	9/16	7/16	.64	.19	.72	.78	1.05
4TMT4[ ]	1/4	1/4	2.13	9/16	1/2	.64	.19	.78	1.02	1.11
6TMT4[ ]	3/8	1/4	2.19	11/16	1/2	.72	.28	.84	1	1.19
6TMT6[ ]	3/8	3/8	2.42	11/16	11/16	.72	.28	.94	1.13	1.30
8TMT6[ ]	1/2	3/8	2.56	7/8	11/16	.99	.42	.97	1.13	1.44
8TMT8[ ]	1/2	1/2	2.81	7/8	13/16	.99	.42	1.03	1.31	1.50
10TMT8[ ]	5/8	1/2	2.84	1	13/16	1	.50	1.03	1.38	1.47
12TMT12[ ]	3/4	3/4	3.09	1 1/8	1	1	.66	1.16	1.50	1.59
14TMT12[ ]	7/8	3/4	3.22	1 1/4	1 1/4	1.06	.72	1.28	1.50	1.72
16TMT12[ ]	1	3/4	3.53	1 1/2	1 1/4	1.31	.72	1.31	1.66	1.88
16TMT16[ ]	1	1	3.72	1 1/2	1 1/4	1.31	.88	1.31	1.84	1.88

Male Run Tee: TMT/ME

connects metric tube to female NPT threads

Part Number*	T Tube O.D.	S Pipe Thd.	Dimensions — mm A	B Hex Flat	C	D	E	G	H	M
3TMT2[ ]ME	3	1/8	43.0	11.1	11.1	14.3	2.2	16.8	18.3	24.7
6TMT2[ ]ME	6	1/8	46.4	14.3	11.1	16.3	3.8	18.2	17.8	26.6
6TMT4[ ]ME	6	1/4	54.1	14.3	12.7	16.3	3.8	19.8	25.9	28.2
6TMT6[ ]ME	6	3/8	59.4	14.3	17.5	16.3	3.8	22.4	28.7	30.7
6TMT8[ ]ME	6	1/2	67.0	14.3	20.7	16.3	3.8	25.4	33.3	33.8
8TMT2[ ]ME	8	1/8	49.3	15.9	12.7	16.7	4.7	20.6	20.6	28.6
8TMT4[ ]ME	8	1/4	58.0	15.9	17.5	16.7	5.9	21.6	25.4	32.6
10TMT2[ ]ME	10	1/8	58.0	19.1	17.5	17.5	4.7	24.6	25.4	32.6
10TMT4[ ]ME	10	1/4	61.1	19.1	17.5	17.5	7.5	24.6	25.4	32.6
10TMT6[ ]ME	10	3/8	61.3	19.1	17.5	17.5	8.0	24.6	28.7	32.6
12TMT4[ ]ME	12	1/4	61.9	22.2	17.5	24.6	7.5	24.6	25.4	36.5
12TMT8[ ]ME	12	1/2	71.5	22.2	19.8	24.6	10.0	26.2	33.3	38.2

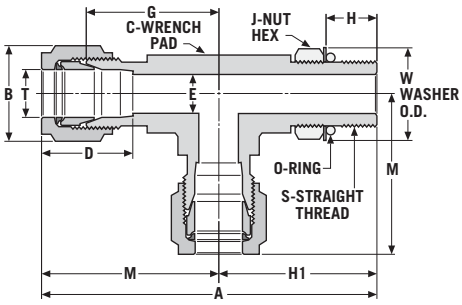

Tee, SAE Run, Positionable: TST

connects fractional tube to SAE straight thread boss

Part Number*	T Tube O.D.	S	Dimensions — inches A	B	C	D	E	G	H	H1	J Hex Flat
4TST4[ ]	1/4	7/16-20	2.13	9/16	.50	.64	.19	.78	.39	1.03	9/16
6TST6[ ]	3/8	9/16-18	2.63	11/16	.81	.72	.28	1.03	.44	1.25	11/16
8TST8[ ]	1/2	3/4-16	3.05	7/8	1	.97	.42	1.13	.50	1.45	7/8
12TST12[ ]	3/4	1 1/16-12	3.63	1 1/8	1.25	1	.66	1.25	.66	1.94	1 1/4
16TST16[ ]	1	1 5/16-12	3.92	1 7/8	1.25	1.31	.88	1.31	.66	2.05	1 1/2

To specify O-ring material for SAE fittings, see page 10.

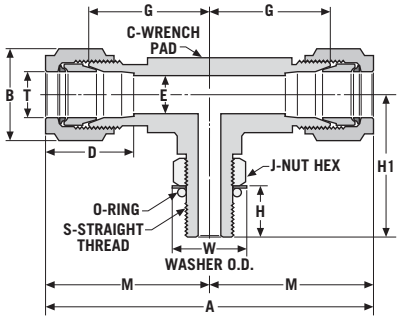

Tee, SAE Branch, Positionable: TTS

connects fractional tube to SAE straight thread boss

Part Number*	T Tube O.D.	S	Dimensions — inches A	B	C	D	E	G	H	H1	J Hex Flat
4TTS4[ ]	1/4	7/16-20	2.22	9/16	.50	.64	.19	.78	.39	1.03	9/16
6TTS6[ ]	3/8	9/16-18	2.75	11/16	.81	.72	.28	1.03	.44	1.25	11/16
8TTS8[ ]	1/2	3/4-16	3.19	7/8	1	.97	.42	1.13	.50	1.45	7/8
12TTS12[ ]	3/4	1 1/16-12	3.38	1 1/8	1.25	1	.66	1.25	.66	1.94	1 1/4
16TTS16[ ]	1	1 5/16-12	3.75	1 7/8	1.25	1.31	.88	1.31	.66	2.05	1 1/2

* [ ] see page 9 for material specifications.

Female Connector: CF

connects fractional tube to male NPT threads

Part Number*	T Tube O.D.	P Female NPT Size	A	B Hex Flat	C Hex Flat	D	E	F	G
			Dimensions — inches						
1CF1[ ]	1/16	1/16	1	5/16	7/16	.41	.05	.48	.78
1CF2[ ]	1/16	1/8	1.03	5/16	9/16	.41	.05	.48	.81
2CF2[ ]	1/8	1/8	1.19	7/16	9/16	.56	.09	.67	.88
2CF4[ ]	1/8	1/4	1.38	7/16	3/4	.56	.09	.67	1.06
3CF2[ ]	3/16	1/8	1.22	1/2	9/16	.59	.13	.70	.91
3CF4[ ]	3/16	1/4	1.41	1/2	3/4	.59	.13	.70	1.09
4CF2[ ]	1/4	1/8	1.25	9/16	9/16	.69	.19	.77	.94
4CF4[ ]	1/4	1/4	1.44	9/16	3/4	.69	.19	.77	1.13
4CF6[ ]	1/4	3/8	1.50	9/16	7/8	.69	.19	.77	1.19
4CF8[ ]	1/4	1/2	1.70	9/16	1 1/16	.69	.19	.77	1.38
6CF2[ ]	3/8	1/8	1.34	11/16	5/8	.72	.28	.83	1
6CF4[ ]	3/8	1/4	1.53	11/16	3/4	.72	.28	.83	1.19
6CF6[ ]	3/8	3/8	1.59	11/16	7/8	.72	.28	.83	1.25
6CF8[ ]	3/8	1/2	1.78	11/16	1 1/16	.72	.28	.83	1.44
6CF12[ ]	3/8	3/4	1.92	11/16	1 1/4	.72	.28	.83	1.56
8CF4[ ]	1/2	1/4	1.72	7/8	13/16	.97	.42	.92	1.25
8CF6[ ]	1/2	3/8	1.72	7/8	7/8	.97	.42	.92	1.25
8CF8[ ]	1/2	1/2	1.91	7/8	1 1/16	.97	.42	.92	1.44
8CF12[ ]	1/2	3/4	2.06	7/8	1 1/4	.97	.42	.92	1.59
8CF16[ ]	1/2	1	2.50	7/8	1 5/8	.97	.42	.92	1.94
10CF6[ ]	5/8	3/8	1.69	1	15/16	1	.50	.92	1.25
10CF8[ ]	5/8	1/2	1.88	1	1 1/16	1	.50	.92	1.44
12CF8[ ]	3/4	1/2	1.94	1 1/8	1 1/16	1	.66	.97	1.25
12CF12[ ]	3/4	3/4	2	1 1/8	1 1/4	1	.66	.97	1.56
14CF12[ ]	7/8	3/4	2	1 1/4	1 1/4	1.06	.72	.97	1.56
16CF12[ ]	1	3/4	2.19	1 1/2	1 3/8	1.31	.88	1.08	1.63
16CF16[ ]	1	1	2.53	1 1/2	1 5/8	1.31	.88	1.08	1.97
20CF20[ ]	1 1/4	1 1/4	2.98	1 7/8	2 1/8	1.62	1.09	1.53	1
24CF24[ ]	1 1/2	1 1/2	3.28	2 1/4	2 3/8	1.97	1.34	1.78	1.09
32CF32[ ]	2	2	4	3	2 7/8	2.66	1.81	2.47	1.12

Metric fitting shown

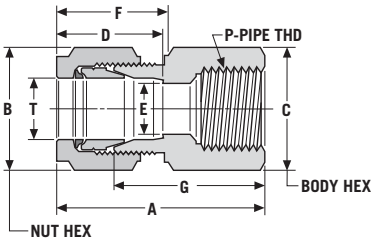

Female Connector: CF/ME

connects metric tube to male NPT threads

Part Number*	T Tube O.D.	P Female NPT Size	A	B Hex Flat	C	D	E	F	G
			Dimensions—mm						
3CF2[ ]ME	3	1/8	32.1	11.1	14.5	14.3	2.2	17.1	24.1
3CF4[ ]ME	3	1/4	34.9	11.1	19.1	14.3	2.2	17.1	27.0
6CF2[ ]ME	6	1/8	31.9	14.3	14.5	16.3	3.8	19.5	23.9
6CF4[ ]ME	6	1/4	36.4	14.3	19.1	16.3	3.8	19.5	28.5
6CF6[ ]ME	6	3/8	39.6	14.3	22.2	16.3	3.8	19.5	31.2
6CF8[ ]ME	6	1/2	43.3	14.3	27.0	16.3	3.8	19.5	35.0
8CF2[ ]ME	8	1/8	32.6	15.9	14.3	16.7	5.8	19.1	24.6
8CF4[ ]ME	8	1/4	37.4	15.9	19.1	16.7	5.8	19.1	29.4
8CF6[ ]ME	8	3/8	38.2	15.9	22.2	16.7	5.8	19.1	30.2
8CF8[ ]ME	8	1/2	44.5	15.9	27.0	16.7	5.8	19.1	36.5
10CF2[ ]ME	10	1/8	33.4	19.1	17.5	17.5	7.9	19.8	25.4
10CF4[ ]ME	10	1/4	38.1	19.1	19.1	17.5	7.9	19.8	30.2
10CF6[ ]ME	10	3/8	39.7	19.1	22.2	17.5	7.9	19.8	31.8
10CF8[ ]ME	10	1/2	44.5	19.1	27.0	17.5	7.9	19.8	36.5
12CF4[ ]ME	12	1/4	43.7	22.2	20.6	24.6	9.9	23.4	31.8
12CF6[ ]ME	12	3/8	43.7	22.2	20.6	24.6	9.9	23.4	31.8
12CF8[ ]ME	12	1/2	48.5	22.2	27.0	24.6	9.9	23.4	36.5
12CF12[ ]ME	12	3/4	52.4	22.2	31.8	24.6	9.9	23.4	40.5
14CF4[ ]ME	14	1/4	41.1	23.8	23.8	22.2	11.9	21.0	31.2
14CF8[ ]ME	14	1/2	45.9	23.8	27.0	22.2	11.9	21.0	36.5
15CF8[ ]ME	15	1/2	46.3	23.8	27.0	22.2	12.7	21.8	36.0
16CF8[ ]ME	16	1/2	47.7	25.4	27.0	25.0	12.7	23.4	36.5
16CF12[ ]ME	16	3/4	53.0	25.4	32.0	25.0	12.7	23.4	41.0
18CF8[ ]ME	18	1/2	48.1	28.6	27.0	25.4	15.8	24.6	38.1
18CF12[ ]ME	18	3/4	49.8	28.6	31.8	25.4	15.8	24.6	39.9
20CF8[ ]ME	20	1/2	52.5	31.8	30.2	31.0	16.7	27.0	38.6
20CF12[ ]ME	20	3/4	53.5	31.8	31.8	31.0	16.7	27.0	39.6
22CF8[ ]ME	22	1/2	49.3	31.8	33.3	27.0	17.8	24.6	38.1
22CF12[ ]ME	22	3/4	53.8	31.8	33.3	27.0	17.8	24.6	42.7
22CF16[ ]ME	22	1	61.0	31.8	41.5	27.0	17.8	24.6	50.0
25CF8[ ]ME	25	1/2	55.8	38.1	34.9	33.3	11.9	27.4	41.4
25CF12[ ]ME	25	3/4	56.0	38.1	35.0	33.3	21.7	27.4	41.0
25CF16[ ]ME	25	1	64.4	38.1	41.3	33.3	21.7	27.4	50.0

* [ ] see page 9 for material specifications.

Dimensions for reference only. Subject to change.

Female Connector: CF/EZ

connects fractional tube with RG parallel threads

Part Number*	T Tube O.D.	S Thd. Size	A	B Hex Flat	C Hex Flat	D	E	F	G
			Dimensions — inches						
2CF2[ ]EZ	1/8	1/8	1.33	7/16	5/8	.56	.09	.67	1.02
2CF4[ ]EZ	1/8	1/4	1.45	7/16	3/4	.56	.09	.67	1.14
4CF[ ]EZ	1/4	1/4	1.50	9/16	3/4	.64	.19	.77	1.17
4CF8[ ]EZ	1/4	1/2	1.89	9/16	1 1/16	.64	.19	.77	1.56
6CF4[ ]EZ	3/8	1/4	1.55	11/16	3/4	.72	.28	.83	1.20
6CF8[ ]EZ	3/8	1/2	1.78	11/16	1 1/16	.72	.28	.83	1.44
8CF4[ ]EZ	1/2	1/4	1.80	7/8	13/16	.97	.22	.92	1.33
8CF8[ ]EZ	1/2	1/2	2.05	7/8	1 1/16	.97	.28	.92	1.58

RG female thread ends require a gasket inserted into the flat bottom of the thread. The male end, when assembled, exerts pressure on the gasket, creating a seal.

Fractional fitting shown

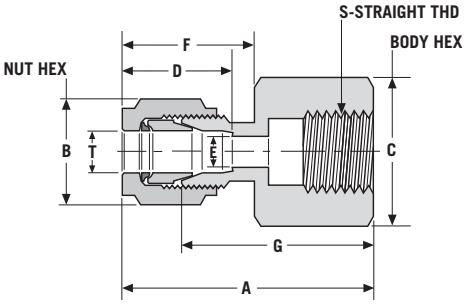

Female Connector: CF/MZ

connects metric tube with RG parallel threads

Part Number*	T Tube O.D.	S Thd. Size	A	B Hex Flat	C Hex Flat	D	E	F	G
			Dimensions—mm						
3CF4[ ]MZ	3	1/4	38.1	11.1	19.0	14.3	2.4	17.1	30.1
6CF4[ ]MZ	6	1/4	39.0	14.3	22.2	16.3	4.0	19.5	30.7
6CF8[ ]MZ	6	1/2	45.3	14.3	27.0	16.3	4.0	19.5	40.0
8CF4[ ]MZ	8	1/4	35.6	15.9	19.1	16.7	5.9	19.1	27.6
8CF8[ ]MZ	8	1/2	44.8	15.9	27.0	16.7	5.9	19.1	36.8
10CF4[ ]MZ	10	1/4	36.4	19.1	19.1	17.5	5.5	19.8	28.4
10CF8[ ]MZ	10	1/2	44.9	19.1	27.0	17.5	7.0	19.8	36.9
12CF4[ ]MZ	12	1/4	46.4	22.2	22.2	24.6	5.5	23.4	34.4
12CF8[ ]MZ	12	1/2	52.3	22.2	27.0	24.6	7.0	23.4	40.4
14CF8[ ]MZ	14	1/2	49.2	23.8	27.0	22.2	7.0	21.0	39.8
16CF8[ ]MZ	16	1/2	55.5	25.4	27.0	25.0	7.0	23.4	44.4
18CF8[ ]MZ	18	1/2	56.2	28.6	30.2	25.4	7.0	24.6	46.3
20CF8[ ]MZ	20	1/2	59.3	31.8	30.2	31.0	7.0	27.0	45.5
22CF8[ ]MZ	22	1/2	56.6	31.8	30.2	27.0	7.0	24.6	45.4
25CF8[ ]MZ	25	1/2	64.9	38.1	34.9	33.3	7.0	27.4	50.5

* [ ] see page 9 for material specifications.

Female Connector: CF/EC

connects fractional tube with RT tapered threads

Part Number*	T Tube O.D.	P Pipe Thd.	A	B Hex Flat	C Hex Flat	D	E	F	G
			Dimensions—inches						
4CF2[ ]EC	1/4	1/8	1.25	9/16	9/16	.64	.19	.77	.94
4CF4[ ]EC	1/4	1/4	1.44	9/16	3/4	.64	.19	.77	1.13
4CF6[ ]EC	1/4	3/8	1.50	9/16	7/8	.64	.19	.77	1.19
4CF8[ ]EC	1/4	1/2	1.70	9/16	1 1/16	.64	.19	.77	1.38
6CF4[ ]EC	3/8	1/4	1.53	11/16	3/4	.72	.28	.83	1.19
6CF6[ ]EC	3/8	3/8	1.59	11/16	7/8	.72	.28	.83	1.25
6CF8[ ]EC	3/8	1/2	1.78	11/16	1 1/16	.72	.28	.83	1.44
8CF4[ ]EC	1/2	1/4	1.72	7/8	13/16	.97	.42	.92	1.25
8CF6[ ]EC	1/2	3/8	1.72	7/8	7/8	.97	.42	.92	1.25
8CF8[ ]EC	1/2	1/2	1.91	7/8	1 1/16	.97	.42	.92	1.44
10CF8[ ]EC	5/8	1/2	1.88	1	1 1/16	1	.50	.92	1.44

Fractional fitting shown

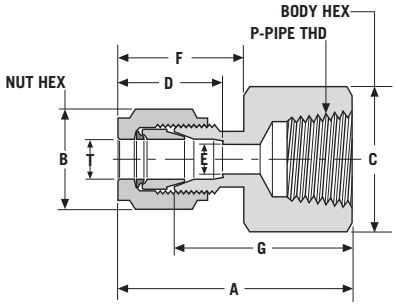

Female Connector: CF/MC

connects metric tube with RT tapered threads

Part Number* RT Threads	T Tube O.D.	P Pipe Thd.	A	B Hex Flat	C Hex Flat	D	E	F	G
			Dimensions—mm						
3CF2[ ]MC	3	1/8	32.1	11.1	14.5	14.3	2.2	17.1	24.1
3CF4[ ]MC	3	1/4	34.9	11.1	19.1	14.3	2.2	17.1	27.0
6CF2[ ]MC	6	1/8	31.9	14.3	14.5	16.3	3.8	19.5	23.9
6CF4[ ]MC	6	1/4	36.4	14.3	19.1	16.3	3.8	19.5	28.5
6CF6[ ]MC	6	3/8	39.6	14.3	22.2	16.3	3.8	19.5	31.2
6CF8[ ]MC	6	1/2	43.3	14.3	27.0	16.3	3.8	19.5	35.0
8CF2[ ]MC	8	1/8	32.6	15.9	14.3	16.7	5.8	19.1	24.6
8CF4[ ]MC	8	1/4	37.4	15.9	19.1	16.7	5.8	19.1	29.4
8CF6[ ]MC	8	3/8	38.2	15.9	22.2	16.7	5.8	19.1	30.2
8CF8[ ]MC	8	1/2	44.5	15.9	27.0	16.7	5.8	19.1	36.5
10CF2[ ]MC	10	1/8	33.4	19.1	17.5	17.5	7.9	19.8	25.4
10CF4[ ]MC	10	1/4	38.1	19.1	19.1	17.5	7.9	19.8	30.2
10CF6[ ]MC	10	3/8	39.7	19.1	22.2	17.5	7.9	19.8	31.8
10CF8[ ]MC	10	1/2	44.5	19.1	27.0	17.5	7.9	19.8	36.5
12CF4[ ]MC	12	1/4	43.7	22.2	20.6	24.6	9.9	23.4	31.8
12CF6[ ]MC	12	3/8	43.7	22.2	20.6	24.6	9.9	23.4	31.8
12CF8[ ]MC	12	1/2	48.5	22.2	27.0	24.6	9.9	23.4	36.5
12CF12[ ]MC	12	3/4	52.4	22.2	31.8	24.6	9.9	23.4	40.5
14CF4[ ]MC	14	1/4	41.1	23.8	23.8	22.2	11.9	21.0	31.2
14CF8[ ]MC	14	1/2	45.9	23.8	27.0	22.2	11.9	21.0	36.5
15CF8[ ]MC	15	1/2	46.3	23.8	27.0	22.2	12.7	21.8	36.0
16CF8[ ]MC	16	1/2	47.7	25.4	27.0	25.0	12.7	23.4	36.5
16CF12[ ]MC	16	3/4	53.0	25.4	32.0	25.0	12.7	23.4	41.0
18CF8[ ]MC	18	1/2	48.1	28.6	27.0	25.4	15.8	24.6	38.1
18CF12[ ]MC	18	3/4	49.8	28.6	31.8	25.4	15.8	24.6	39.9
20CF8[ ]MC	20	1/2	52.5	31.8	30.2	31.0	16.7	27.0	38.6
20CF12[ ]MC	20	3/4	53.5	31.8	31.8	31.0	16.7	27.0	39.6
22CF8[ ]MC	22	1/2	49.3	31.8	33.3	27.0	17.8	24.6	38.1
22CF12[ ]MC	22	3/4	53.8	31.8	33.3	27.0	17.8	24.6	42.7
22CF16[ ]MC	22	1	61.0	31.8	41.5	27.0	17.8	24.6	50.0
25CF8[ ]MC	25	1/2	55.8	38.1	34.9	33.3	11.9	27.4	41.4
25CF12[ ]MC	25	3/4	56.0	38.1	35.0	33.3	21.7	27.4	41.0
25CF16[ ]MC	25	1	64.4	38.1	41.3	33.3	21.7	27.4	50.0

* [ ] see page 9 for material specifications.

Dimensions for reference only. Subject to change.

Bulkhead Connector, Female: BCF

connects fractional tube to male NPT thread

Part Number*	T Tube O.D.	P Male NPT Size	A	B Hex Flat	C Hex Flat	D	E	Fx	G	J Hex Flat	Panel Hole Size	Max. Panel Thickness
			Dimensions — inches									
2BCF2[ ]	1/8	1/8	1.81	7/16	9/16	.56	.09	1.28	1.50	1/2	.33	.44
4BCF2[ ]	1/4	1/8	1.89	9/16	5/8	.64	.19	1.36	1.56	5/8	.45	.47
4BCF4[ ]	1/4	1/4	2.08	9/16	3/4	.64	.19	1.40	1.75	5/8	.45	.47
6BCF2[ ]	3/8	1/8	2.22	11/16	3/4	.72	.28	1.50	1.88	3/4	.58	.53
6BCF4[ ]	3/8	1/4	2.22	11/16	3/4	.72	.28	1.50	1.88	3/4	.58	.53
6BCF6[ ]	3/8	3/8	2.28	11/16	7/8	.72	.28	1.50	.94	3/4	.58	.53
8BCF4[ ]	1/2	1/4	2.44	7/8	15/16	.97	.42	1.72	1.97	15/16	.77	.59
8BCF6[ ]	1/2	3/8	2.50	7/8	15/16	.97	.42	1.72	2.03	15/16	.77	.59
8BCF8[ ]	1/2	1/2	2.69	7/8	1 1/16	.97	.42	1.72	2.22	15/16	.77	.59
10BCF8[ ]	5/8	1/2	2.69	1	1 1/16	1	.50	1.72	2.25	1 1/16	.89	.56

Metric fitting shown

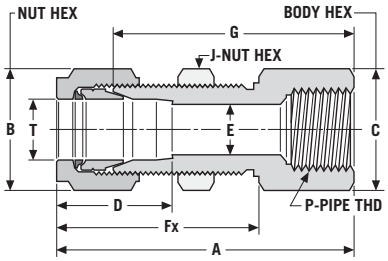

Bulkhead Connector, Female: BCF/ME

connects metric tube to male NPT threads

Part Number*	T Tube O.D.	P Male NPT Size	A	B Hex Flat	C Hex Flat	D	E	Fx	G	J Hex Flat	Panel Hole Size	Max. Panel Thickness
			Dimensions—mm									
3BCF2[ ]ME	3	1/8	46.0	11.1	14.5	14.3	2.5	32.5	38.0	12.7	8.3	12.0
6BCF2[ ]ME	6	1/8	48.0	14.3	14.3	16.3	3.9	34.6	39.6	15.9	11.5	13.0
6BCF4[ ]ME	6	1/4	53.8	14.3	19.1	16.3	3.9	34.6	45.5	15.9	11.5	13.0
8BCF4[ ]ME	8	1/4	55.0	15.9	17.5	16.7	6.0	36.5	47.0	17.5	13.1	14.0
10BCF4[ ]ME	10	1/4	55.6	19.1	19.1	17.5	7.9	37.3	47.6	19.1	16.5	14.0
12BCF6[ ]ME	12	3/8	63.0	22.2	24.0	24.6	10.0	44.0	52.0	23.8	19.5	16.0
12BCF8[ ]ME	12	1/2	68.3	22.2	26.9	24.6	9.9	43.7	56.4	23.8	19.5	16.0
14BCF8[ ]ME	14	1/2	68.0	23.8	24.0	22.2	12.0	41.1	56.0	23.8	19.5	16.0
16BCF8[ ]ME	16	1/2	68.3	25.4	26.9	25.0	12.6	43.7	57.2	27.0	22.5	14.0
18BCF8[ ]ME	18	1/2	72.0	28.6	30.0	25.4	12.6	48.0	61.0	30.2	26.0	17.0
22BCF8[ ]ME	22	1/2	77.0	31.8	33.5	27.0	12.6	53.0	65.0	33.3	29.5	24.0
25BCF8[ ]ME	25	1/2	84.0	38.1	40.0	33.3	12.6	60.0	70.0	39.7	33.8	24.0

* [ ] see page 9 for material specifications.

Female Elbow: LF

connects fractional tube to male NPT threads

Part Number*	T Tube O.D.	P Pipe Size	Dimensions — inches A	B Hex Flat	C	D	E	G	H
1LF1[ ]	1/16	1/16	.78	5/16	7/16	.41	.05	.56	.75
1LF2[ ]	1/16	1/8	.84	5/16	1/2	.41	.05	.63	.75
2LF2[ ]	1/8	1/8	1	7/16	1/2	.56	.09	.69	.75
2LF4[ ]	1/8	1/4	1.13	7/16	11/16	.56	.09	.81	.84
3LF2[ ]	3/16	1/8	1.03	1/2	1/2	.59	.13	.72	.75
4LF2[ ]	1/4	1/8	1.08	9/16	1/2	.64	.19	.75	.81
4LF4[ ]	1/4	1/4	1.20	9/16	11/16	.64	.19	.88	.84
4LF6[ ]	1/4	3/8	1.33	9/16	13/16	.64	.19	1	.84
4LF8[ ]	1/4	1/2	1.45	9/16	1	.64	.19	1.13	1.13
6LF2[ ]	3/8	1/8	1.81	11/16	1/2	.72	.28	.84	.69
6LF4[ ]	3/8	1/4	1.28	11/16	11/16	.72	.28	.94	.84
6LF6[ ]	3/8	3/8	1.38	11/16	13/16	.72	.28	1.03	.84
6LF8[ ]	3/8	1/2	1.48	11/16	1	.72	.28	1.13	1.13
8LF4[ ]	1/2	1/4	1.44	7/8	11/16	.97	.42	.97	.91
8LF6[ ]	1/2	3/8	1.50	7/8	13/16	.97	.42	1.03	.91
8LF8[ ]	1/2	1/2	1.59	7/8	1	.97	.42	1.13	1.13
8LF12[ ]	1/2	3/4	1.66	7/8	1 1/4	.97	.42	1.19	1.25
10LF6[ ]	5/8	3/8	1.47	1	13/16	1	.50	1.03	.91
10LF8[ ]	5/8	1/2	1.56	1	1	1	.50	1.13	1.13
12LF8[ ]	3/4	1/2	1.59	1 1/8	1	1	.66	1.16	1.13
12LF12[ ]	3/4	3/4	1.34	1 1/8	1 1/4	1	.66	1.25	1.25
14LF12[ ]	7/8	3/4	1.69	1 1/4	1 1/4	1.06	.72	1.25	1.25
16LF12[ ]	1	3/4	1.88	1 1/2	1 1/4	1.31	.88	1.31	1.25
16LF16[ ]	1	1	2.06	1 1/2	1 11/16	1.31	.88	1.50	1.50

Metric fitting shown

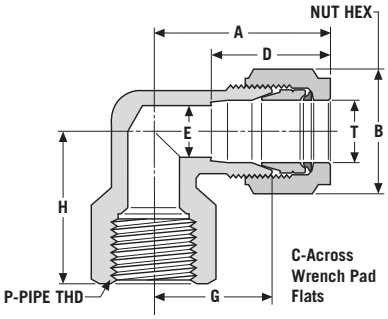

Female Elbow: LF/ME, LF/MC

connects metric tube to male NPT or RT tapered threads

Part Number* NPT Threads	RT Threads	T Tube O.D.	P Pipe Size	Dimensions—mm A	B Hex Flat	C	D	E	G	H
3LF2[ ]ME	3LF2[ ]MC	3	1/8	25.5	11.1	12.6	14.3	2.2	17.5	17.1
3LF4[ ]ME	3LF4[ ]MC	3	1/4	25.0	11.1	12.6	14.3	2.3	17.5	21.5
4LF4[ ]ME	4LF4[ ]MC	4	1/4	30.2	12.7	17.3	15.1	2.3	22.4	21.3
6LF2[ ]ME	6LF2[ ]MC	6	1/8	27.4	14.3	12.6	16.3	3.8	19.1	20.6
6LF4[ ]ME	6LF4[ ]MC	6	1/4	30.7	14.3	17.3	16.3	3.8	22.4	21.3
6LF6[ ]ME	6LF6[ ]MC	6	3/8	33.8	14.3	20.5	16.3	3.8	25.4	21.3
6LF8[ ]ME	6LF8[ ]MC	6	1/2	37.1	14.3	25.3	16.3	3.8	28.7	28.7
8LF2[ ]ME	8LF2[ ]MC	8	1/8	27.8	15.9	12.6	16.7	5.8	19.8	16.0
8LF4[ ]ME	8LF4[ ]MC	8	1/4	31.1	15.9	17.3	16.7	5.8	23.1	22.4
8LF6[ ]ME	8LF6[ ]MC	8	3/8	29.0	15.9	20.5	16.7	5.8	23.1	23.1
10LF2[ ]ME	10LF2[ ]MC	10	1/8	31.9	19.1	17.3	17.5	7.9	23.9	21.3
10LF4[ ]ME	10LF4[ ]MC	10	1/4	31.9	19.1	17.3	17.5	7.9	23.9	21.3
10LF6[ ]ME	10LF6[ ]MC	10	3/8	34.1	19.1	20.5	17.5	7.9	26.2	21.3
10LF8[ ]ME	10LF8[ ]MC	10	1/2	36.7	19.1	25.3	17.5	7.9	28.7	28.7
12LF4[ ]ME	12LF4[ ]MC	12	1/4	36.6	22.2	17.3	24.6	7.5	24.6	21.3
12LF6[ ]ME	12LF6[ ]MC	12	3/8	38.1	22.2	20.5	24.6	9.9	26.2	23.1
12LF8[ ]ME	12LF8[ ]MC	12	1/2	40.6	22.2	25.3	24.6	9.9	28.7	28.7
14LF8[ ]ME	14LF8[ ]MC	14	1/2	37.0	23.8	21.0	22.2	12.0	25.0	28.5
16LF8[ ]ME	16LF8[ ]MC	16	1/2	40.9	25.4	25.3	25.0	12.7	29.7	28.7
18LF8[ ]ME	18LF8[ ]MC	18	1/2	39.4	28.6	25.3	25.4	15.8	29.5	28.7
18LF12[ ]ME	18LF12[ ]MC	18	3/4	41.7	28.6	31.6	25.4	15.8	31.8	31.8
22LF8[ ]ME	22LF8[ ]MC	22	1/2	44.0	31.8	25.3	27.0	17.9	29.5	28.5
22LF12[ ]ME	22LF12[ ]MC	22	3/4	44.0	31.8	31.6	27.0	17.9	33.5	32.0
25LF12[ ]ME	25LF12[ ]MC	25	3/4	47.5	38.1	31.6	33.3	21.7	33.5	32.0
25LF16[ ]ME	25LF16[ ]MC	25	1	52.0	38.1	38.5	33.3	21.7	38.0	38.0

* [ ] see page 9 for material specifications.

Dimensions for reference only. Subject to change.

Fractional fitting shown

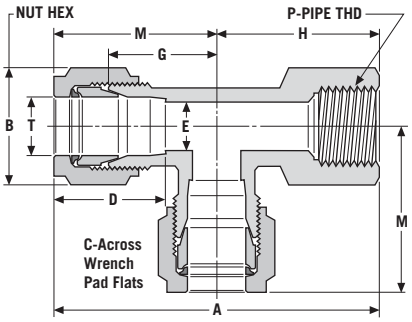

Female Run Tee: TFT

connects fractional tube to male NPT threads

Part Number*	T Tube O.D.	P Pipe Size	A	B Hex Flat	C	D	E	G	H	M
			Dimensions — inches							
1TFT1[ ]	1/16	1/16	1.53	5/16	7/16	.41	.05	.56	.75	.78
2TFT2[ ]	1/8	1/8	1.75	7/16	1/2	.56	.09	.69	.75	1
3TFT2[ ]	3/16	1/8	1.81	1/2	1/2	.59	.13	.75	.75	1.06
4TFT2[ ]	1/4	1/8	1.83	9/16	1/2	.64	.19	.75	.75	1.08
4TFT4[ ]	1/4	1/4	2.11	9/16	11/16	.64	.19	.94	.84	1.27
6TFT4[ ]	3/8	1/4	2.23	11/16	11/16	.72	.28	.94	.84	1.28
6TFT6[ ]	3/8	3/8	2.30	11/16	13/16	.72	.28	1.03	.91	1.39
8TFT4[ ]	1/2	1/4	2.41	7/8	11/16	.97	.42	.97	.97	1.44
8TFT6[ ]	1/2	3/8	2.53	7/8	13/16	.97	.42	1.03	.91	1.50
8TFT8[ ]	1/2	1/2	2.66	7/8	1	.97	.42	1.06	1.13	1.53
10TFT8[ ]	5/8	1/2	2.69	1	1	1	.50	1.13	1.13	1.56
12TFT8[ ]	3/4	1/2	2.73	1 1/8	1	1	.66	1.16	1.13	1.61
12TFT12[ ]	3/4	3/4	2.94	1 1/8	1 1/4	1	.66	1.25	1.25	1.69
14TFT12[ ]	7/8	3/4	2.94	1 1/4	1 1/4	1.06	.72	1.25	1.25	1.69
16TFT12[ ]	1	3/4	3.13	1 1/2	1 1/4	1.31	.88	1.94	1.25	1.88
16TFT16[ ]	1	1	3.56	1 1/2	1 11/16	1.31	.88	1.50	1.50	2.06

Female Run Tee: TFT/ME

connects metric tube to male NPT threads

Part Number*	T Tube O.D.	S Pipe Thd.	A	B Hex Flat	C	D	E	G	H	M
			Dimensions — mm							
3TFT2[ ]ME	3	1/8	44.0	11.1	12.7	14.3	3.3	17.5	19.1	25.5
6TFT2[ ]ME	6	1/8	46.5	14.3	12.7	16.3	3.8	19.1	19.1	27.4
6TFT4[ ]ME	6	1/4	52.1	14.3	17.5	16.3	3.8	22.4	21.3	30.7
6TFT8[ ]ME	6	1/2	63.2	14.3	25.4	16.3	3.8	26.2	28.7	34.5
10TFT2[ ]ME	10	1/8	57.3	19.1	17.5	17.5	7.9	24.6	24.6	32.6
10TFT4[ ]ME	10	1/4	57.3	19.1	17.5	17.5	7.9	24.6	24.6	32.6
10TFT6[ ]ME	10	3/8	57.3	19.1	20.7	17.5	7.9	26.2	23.1	34.1
10TFT8[ ]ME	10	1/2	63.6	19.1	25.4	17.5	7.9	26.9	28.7	34.9
12TFT4[ ]ME	12	1/4	56.0	22.2	17.5	24.6	9.9	23.0	21.3	30.7
12TFT8[ ]ME	12	1/2	67.5	22.2	25.4	24.6	9.9	27.0	28.6	38.9

Fractional fitting shown

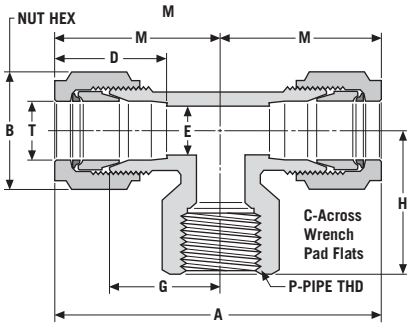

Female Branch Tee: TTF

connects fractional tube to male NPT threads

Part Number*	T Tube O.D.	P Pipe Size	A	B Hex Flat	C	D	E	G	H	M
			Dimensions — inches							
1TTF1[ ]	1/16	1/16	1.56	5/16	7/16	.41	.05	.56	.75	.78
2TTF2[ ]	1/8	1/8	2	7/16	1/2	.56	.09	.69	.75	1
3TTF2[ ]	3/16	1/8	2.13	1/2	1/2	.59	.13	.75	.75	1.06
4TTF2[ ]	1/4	1/8	2.16	9/16	1/2	.64	.19	.75	.75	1.08
4TTF4[ ]	1/4	1/4	2.53	9/16	11/16	.64	.19	.94	.84	1.27
6TTF4[ ]	3/8	1/4	2.56	11/16	11/16	.72	.28	.94	.84	1.28
6TTF6[ ]	3/8	3/8	2.78	11/16	13/16	.72	.28	1.03	.91	1.39
6TTF8[ ]	3/8	1/2	2.47	11/16	1	.72	.28	1.06	1.13	1.41
8TTF4[ ]	1/2	1/4	2.88	7/8	11/16	.97	.42	.97	.91	1.44
8TTF6[ ]	1/2	3/8	3	7/8	13/16	.97	.42	1.03	.91	1.50
8TTF8[ ]	1/2	1/2	3.06	7/8	1	.97	.42	1.06	1.13	1.53
10TTF8[ ]	5/8	1/2	3.13	1	1	1	.50	1.13	1.13	1.56
12TTF8[ ]	3/4	1/2	3.20	1 1/8	1	1	.66	1.16	1.13	1.61
12TTF12[ ]	3/4	3/4	3.38	1 1/8	1 1/4	1	.66	1.25	1.25	1.69
14TTF12[ ]	7/8	3/4	3.44	1 1/4	1 1/4	1.06	.72	1.25	1.25	1.72
16TTF12[ ]	1	3/4	3.75	1 1/2	1 1/4	1.31	.88	1.31	1.25	1.88
16TTF16[ ]	1	1	4.13	1 1/2	1 11/16	1.31	.88	1.50	1.50	2.06

Female Branch Tee: TTF/ME

connects metric tube to male NPT threads

Part Number*	T Tube O.D.	P Pipe Thd.	A	B Hex Flat	C	D	E	G	H	M
			Dimensions—mm							
3TTF2[ ]ME	3	1/8	51.0	11.1	12.7	14.3	2.3	17.5	19.1	25.5
4TTF2[ ]ME	4	1/8	50.7	12.7	12.7	15.1	2.3	17.5	19.1	25.4
4TTF4[ ]ME	4	1/4	60.3	12.7	17.5	15.1	2.3	22.4	21.3	30.2
6TTF2[ ]ME	6	1/8	54.8	14.3	12.7	16.3	3.8	19.1	19.1	27.4
6TTF4[ ]ME	6	1/4	61.4	14.3	17.5	16.3	3.8	22.4	21.3	30.7
6TTF6[ ]ME	6	3/8	67.5	14.3	20.7	16.3	3.8	25.4	23.1	33.8
6TTF8[ ]ME	6	1/2	69.0	14.3	25.4	16.3	3.8	26.2	28.7	34.5
8TTF2[ ]ME	8	1/8	55.6	15.9	12.7	16.7	5.8	19.8	19.1	27.8
8TTF4[ ]ME	8	1/4	62.2	15.9	17.5	16.7	5.8	23.1	22.4	31.1
10TTF2[ ]ME	10	1/8	62.2	19.1	17.5	17.5	7.9	24.6	23.1	32.6
10TTF4[ ]ME	10	1/4	62.2	19.1	17.5	17.5	7.9	24.6	23.1	32.6
10TTF6[ ]ME	10	3/8	68.3	19.1	20.7	17.5	7.9	26.2	23.1	34.1
10TTF8[ ]ME	10	1/2	69.8	19.1	25.4	17.5	7.9	26.9	28.7	34.9
12TTF4[ ]ME	12	1/4	73.0	22.2	20.7	24.6	10.0	24.6	23.1	36.6
12TTF8[ ]ME	12	1/2	81.3	22.2	25.4	24.6	10.0	28.7	28.7	40.6
16TTF8[ ]ME	16	1/2	81.7	25.4	25.4	25.0	12.7	29.7	28.7	40.9

* [ ] see page 9 for material specifications.

Fractional fitting shown

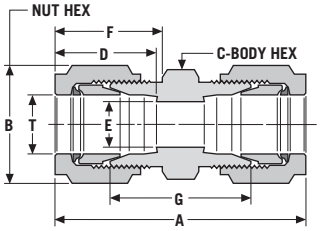

Union: U

connects fractional tubes

Part Number*	T Tube O.D.	Dimensions — inches A	B	C	D	E	F	G
1U[ ]	1/16	1.13	5/16	5/16	.41	.05	.48	.69
2U[ ]	1/8	1.50	7/16	7/16	.56	.09	.67	.88
3U[ ]	3/16	1.61	1/2	7/16	.59	.13	.70	.98
4U[ ]	1/4	1.75	9/16	1/2	.64	.19	.77	1.09
6U[ ]	3/8	1.89	11/16	5/8	.72	.28	.83	1.20
8U[ ]	1/2	2.16	7/8	13/16	.97	.42	.92	1.22
10U[ ]	5/8	2.16	1	15/16	1	.50	.92	1.28
12U[ ]	3/4	2.28	1 1/8	1 1/16	1	.66	.97	1.41
14U[ ]	7/8	2.28	1 1/4	1 3/16	1.06	.72	.97	1.41
16U[ ]	1	2.73	1 1/2	1 3/8	1.31	.88	1.08	1.59
20U[ ]	1 1/4	3.63	1 7/8	1 3/4	1.62	1.09	1.53	1.89
24U[ ]	1 1/2	4.25	2 1/4	2 1/8	1.97	1.34	1.78	2.11
32U[ ]	2	5.88	3	2 3/4	2.66	1.81	2.47	2.94

Union: U/MM

connects metric tubes

Part Number*	T Tube O.D.	Dimensions — mm A	B Hex Flat	C Hex Flat	D	E	F	G
3U[ ]MM	3	40.8	11.1	11.1	14.3	2.2	17.1	24.9
4U[ ]MM	4	42.7	12.7	11.1	15.1	2.2	17.9	27.0
6U[ ]MM	6	45.7	14.3	12.7	16.3	3.8	19.5	28.9
8U[ ]MM	8	45.6	15.9	14.3	16.7	5.8	19.1	29.6
10U[ ]MM	10	46.9	19.1	17.5	17.5	7.9	19.8	30.9
12U[ ]MM	12	54.8	22.2	20.6	24.6	9.9	23.4	30.9
14U[ ]MM	14	50.5	23.8	22.2	22.2	11.9	21.0	31.8
15U[ ]MM	15	42.1	23.8	22.2	22.2	12.7	21.8	31.8
16U[ ]MM	16	54.8	25.4	23.8	25.0	12.7	23.4	32.5
18U[ ]MM	18	55.6	28.6	27.0	25.4	15.8	24.6	35.7
20U[ ]MM	20	63.5	31.8	30.2	31.0	16.7	27.0	35.8
22U[ ]MM	22	60.3	31.8	30.2	27.0	19.9	24.6	37.9
25U[ ]MM	25	69.3	38.1	34.9	33.3	21.7	27.4	40.5
30U[ ]MM	30	92.7	50.8	46	39.6	26.2	39.2	49.5
32U[ ]MM	32	97.3	50.8	46	42	28.6	41.6	51.3
38U[ ]MM	38	113.6	60.3	55	49.4	33.7	47.9	58.4

* [ ] see page 9 for material specifications.

Dimensions for reference only. Subject to change.

Reducing Union: RU connects fractional tubes

Part Number*	T Tube O.D.	Tx Tube O.D.	A	B Hex Flat	Bx Hex Flat	C Hex Flat	D	Dx	E	F	Fx	G
						Dimensions — inches						
2RU1[ ]	1/8	1/16	1.30	7/16	5/16	7/16	.56	.41	.05	.67	.48	.77
3RU1[ ]	3/16	1/16	1.34	1/2	5/16	7/16	.59	.41	.05	.70	.48	.81
3RU2[ ]	3/16	1/8	1.55	1/2	7/16	7/16	.59	.56	.09	.70	.67	.92
4RU1[ ]	1/4	1/16	1.48	9/16	5/16	1/2	.64	.41	.05	.77	.48	.94
4RU2[ ]	1/4	1/8	1.66	9/16	7/16	1/2	.64	.56	.09	.77	.67	1.02
4RU3[ ]	1/4	3/16	1.67	9/16	1/2	1/2	.64	.70	.13	.77	.70	1.03
6RU1[ ]	3/8	1/16	1.50	11/16	5/16	5/8	.72	.41	.05	.83	.48	.94
6RU2[ ]	3/8	1/8	1.77	11/16	7/16	5/8	.72	.56	.09	.83	.67	1.09
6RU4[ ]	3/8	1/4	1.83	11/16	9/16	5/8	.72	.64	.19	.83	.77	1.16
8RU2[ ]	1/2	1/8	1.94	7/8	7/16	13/16	.97	.56	.09	.92	.67	1.16
8RU4[ ]	1/2	1/4	1.95	7/8	9/16	13/16	.97	.64	.19	.92	.77	1.16
8RU6[ ]	1/2	3/8	2.03	7/8	11/16	13/16	.97	.72	.30	.92	.83	1.22
10RU6[ ]	5/8	3/8	2.05	1	11/16	15/16	1	.72	.30	.92	.83	1.25
10RU8[ ]	5/8	1/2	2.16	1	7/8	15/16	1	.97	.42	.92	.92	1.25
12RU4[ ]	3/4	1/4	2.16	1 1/8	9/16	1 1/16	1	.64	.19	.97	.77	1.36
12RU6[ ]	3/4	3/8	2.22	1 1/8	11/16	1 1/16	1	.72	.30	.97	.83	1.41
12RU8[ ]	3/4	1/2	2.25	1 1/8	7/8	1 1/16	1	.97	.42	.97	.92	1.34
12RU10[ ]	3/4	5/8	2.25	1 1/8	1	1 1/16	1	1	.50	.97	.92	1.38
14RU12[ ]	7/8	3/4	2.33	1 1/4	1 1/8	1 3/16	1.06	1	.66	.97	.97	1.44
16RU8[ ]	1	1/2	2.61	1 1/2	7/8	1 3/8	1.31	.97	.42	1.08	.92	1.56
16RU12[ ]	1	3/4	2.55	1 1/2	1 1/8	1 3/8	1.31	1	.66	1.08	.97	1.53
16RU14[ ]	1	7/8	2.58	1 1/2	1 1/4	1 3/8	1.31	1.06	.72	1.08	.97	1.56
32RU24[ ]	2	1 1/2	5.18	3	2 1/4	2 3/4	2.64	1.97	1.34	2.46	1.78	2.65

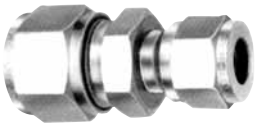

Fractional fitting shown

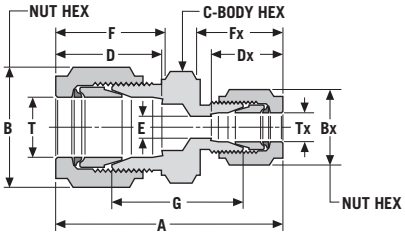

Reducing Union: RU/MM connects metric tubes

Part Number*	T Tube O.D.	Tx Tube O.D	A	B Hex Flat	Bx Hex Flat	C Hex Flat	D	Dx	E	F	Fx	G
						Dimensions — mm						
4RU3[ ]MM	4	3	41.6	12.7	11.1	11.1	15.1	14.3	2.2	17.9	17.1	25.8
6RU3[ ]MM	6	3	43.2	14.3	11.1	12.7	16.3	14.3	2.2	19.5	17.1	26.9
6RU4[ ]MM	6	4	44.0	14.3	12.7	12.7	16.3	15.1	2.3	19.5	17.9	27.8
8RU4[ ]MM	8	4	43.6	15.9	12.7	14.3	16.7	15.1	2.3	19.1	17.9	27.6
8RU6[ ]MM	8	6	46.1	15.9	14.3	14.3	16.7	16.3	3.8	19.1	19.5	29.7
10RU6[ ]MM	10	6	46.2	19.1	14.3	17.5	17.5	16.3	3.8	19.8	19.5	29.9
10RU8[ ]MM	10	8	45.7	19.1	15.9	17.5	17.5	16.7	5.8	19.8	19.1	29.7
12RU6[ ]MM	12	6	49.7	22.2	14.3	20.6	24.6	16.3	3.8	23.4	19.5	29.4
12RU8[ ]MM	12	8	50.4	22.2	15.9	20.6	24.6	16.7	5.8	23.4	19.1	30.5
12RU10[ ]MM	12	10	50.9	22.2	19.1	20.6	24.6	17.5	7.9	23.4	19.8	30.9
14RU8[ ]MM	14	8	47.2	23.8	15.9	22.2	22.2	16.7	5.8	21.0	19.1	29.8
14RU10[ ]MM	14	10	48.3	23.8	19.1	22.2	22.2	17.5	7.9	21.0	19.8	30.9
14RU12[ ]MM	14	12	52.3	23.8	22.2	22.2	22.2	24.6	9.9	21.0	23.4	30.9
16RU10[ ]MM	16	10	50.9	25.4	19.1	23.8	25.0	17.5	7.9	23.4	19.8	31.8
16RU12[ ]MM	16	12	54.8	25.4	22.2	23.8	25.0	24.6	9.9	23.4	23.4	31.8
18RU12[ ]MM	18	12	57.5	28.6	22.2	27.0	25.4	24.6	9.9	24.6	23.4	35.6
18RU16[ ]MM	18	16	57.4	28.6	25.4	27.0	25.4	25.0	12.7	24.6	23.4	36.3
22RU12[ ]MM	22	12	59.5	31.8	22.2	30.1	27.0	24.6	9.9	24.6	23.4	36.3
22RU18[ ]MM	22	18	61.1	31.8	28.6	34.9	27.0	25.4	15.8	24.6	24.6	40.0
25RU12[ ]MM	25	12	66.0	38.1	22.2	34.9	33.3	24.6	9.9	27.4	23.4	39.6
25RU18[ ]MM	25	18	64.0	38.1	28.6	34.9	33.3	25.4	15.8	27.4	24.6	39.6

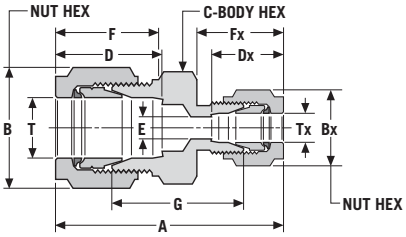

Reducing Union: RU/ME connects metric tubes to fractional tubes

Part Number*	T Tube O.D.	Tx Tube O.D	A	B Hex Flat	Bx Hex Flat	C Hex Flat	D	Dx	E	F	Fx	G
						Dimensions — mm						
3RU1[ ]ME	3	1/16	36.1	11.1	7.9	11.1	14.3	10.3	1.2	17.1	12.3	22.6
3RU2[ ]ME	3	1/8	38.0	11.1	11.1	11.1	14.3	14.3	2.2	17.1	17.1	22.0
3RU4[ ]ME	3	1/4	42.5	11.1	14.3	12.5	14.3	16.3	2.5	17.1	19.5	26.0
4RU2[ ]ME	4	1/8	40.6	12.7	11.1	11.1	15.1	14.3	2.2	17.9	17.1	24.8
4RU4[ ]ME	4	1/4	43.0	12.7	14.3	12.7	15.1	16.3	2.2	17.9	19.5	26.0
6RU1[ ]ME	6	1/16	37.5	14.3	7.9	12.7	16.3	10.3	1.2	19.5	12.3	23.5
6RU2[ ]ME	6	1/8	43.2	14.3	11.1	12.7	16.3	14.3	2.2	19.5	17.1	26.9
6RU4[ ]ME	6	1/4	44.7	14.3	14.3	12.7	16.3	16.3	3.8	19.5	19.5	27.9
6RU8[ ]ME	6	1/2	49.7	14.3	22.2	20.6	16.3	24.6	3.8	19.5	23.4	29.4
8RU2[ ]ME	8	1/8	42.9	15.9	11.1	14.3	16.7	14.3	2.2	19.1	17.1	26.9
8RU3[ ]ME	8	3/16	43.2	15.9	12.7	14.3	16.7	15.1	3.1	19.1	17.9	27.2
8RU4[ ]ME	8	1/4	44.8	15.9	14.3	14.3	16.7	16.3	4.6	19.1	19.5	28.5
8RU6[ ]ME	8	3/8	42.7	15.9	17.5	15.9	16.7	18.3	5.9	19.5	23.4	29.4
8RU8[ ]ME	8	1/2	50.9	15.9	22.2	20.6	16.7	24.6	5.8	19.1	23.4	31.0
8RU10[ ]ME	8	5/8	50.1	15.9	25.4	23.8	16.7	25.4	5.8	19.1	23.4	31.0
10RU2[ ]ME	10	1/8	43.5	19.1	11.1	17.5	17.5	14.3	2.3	19.8	17.1	27.5
10RU4[ ]ME	10	1/4	46.8	19.1	14.3	17.5	17.5	16.3	4.6	19.8	19.5	30.5
10RU6[ ]ME	10	3/8	46.8	19.1	17.5	17.5	17.5	18.3	7.4	19.8	21.0	30.0
10RU8[ ]ME	10	1/2	50.3	19.1	22.2	20.6	17.5	24.6	7.9	19.8	23.4	30.4
10RU10[ ]ME	10	5/8	50.9	19.1	25.4	23.8	17.5	25.4	7.9	19.8	23.4	31.8
12RU4[ ]ME	12	1/4	49.5	22.2	14.3	20.6	24.6	16.3	4.8	23.4	19.5	29.5
12RU6[ ]ME	12	3/8	50.1	22.2	17.5	20.6	24.6	18.3	7.4	23.4	21.0	29.4
12RU8[ ]ME	12	1/2	54.9	22.2	22.2	20.6	24.6	24.6	9.9	23.4	23.4	31.0
16RU10[ ]ME	16	5/8	55.0	25.4	25.4	23.8	25.0	25.4	12.7	23.4	23.4	32.5
16RU12[ ]ME	16	3/4	57.5	25.4	28.6	27.0	25.0	25.4	12.7	23.4	24.6	35.0
18RU12[ ]ME	18	3/4	57.0	28.6	28.6	27.0	25.4	25.4	15.8	24.6	24.6	35.5

* [ ] see page 9 for material specifications.

Bulkhead Union: BU connects fractional tubes

Part Number*	T Tube O.D.	A	B Hex Flat	C Hex Flat	D	E	F	Fx	G	J Hex Flat	Panel Hole Size	Max. Panel Thickness
	Dimensions — inches											
1BU[ ]	1/16	1.50	5/16	7/16	.41	.05	.48	.91	1	3/8	.20	11/32
2BU[ ]	1/8	2.13	7/16	1/2	.56	.09	.67	1.19	1.50	1/2	.33	7/16
3BU[ ]	3/16	2.22	1/2	9/16	.59	.13	.70	1.31	1.59	9/16	.39	15/32
4BU[ ]	1/4	2.34	9/16	5/8	.64	.19	.77	1.36	1.69	5/8	.45	15/32
6BU[ ]	3/8	2.56	11/16	3/4	.72	.28	.83	1.50	1.88	3/4	.58	17/32
8BU[ ]	1/2	2.94	7/8	15/16	.97	.42	.92	1.72	2	15/16	.77	19/32
10BU[ ]	5/8	2.94	1	1 1/16	1	.50	.92	1.72	2.06	1 1/16	.89	9/16
12BU[ ]	3/4	3.19	1 1/8	1 3/16	1	.66	.97	1.91	2.31	1 3/16	1.02	21/32
14BU[ ]	7/8	3.41	1 1/4	1 5/16	1.06	.72	.97	2.09	2.53	1 5/16	1.14	25/32
16BU[ ]	1	3.95	1 1/2	1 9/16	1.31	.88	1.08	2.34	2.81	1 9/16	1.33	1 1/32
24BU[ ]	1 1/2	5.48	2 1/4	2 1/4	1.97	1.34	1.78	3.01	3.34	2 1/4	1.95	3/4
32BU[ ]	2	7.10	3	2 3/4	2.66	1.81	2.47	3.69	4.16	3	2.64	3/4

Fractional fitting shown

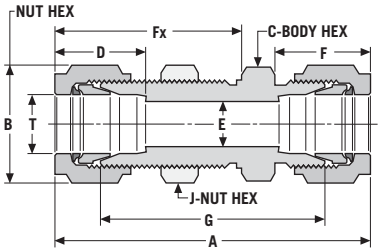

Bulkhead Union: BU/MM connects metric tubes

Part Number*	T Tube O.D.	A	B Hex Flat	C Hex Flat	D	E	F	Fx	G	J Hex Flat	Panel Hole Size	Max. Panel Thickness
	Dimensions — mm											
3BU[ ]MM	3	56.3	11.1	12.7	14.3	2.2	17.1	32.5	40.4	12.7	8.3	12.0
4BU[ ]MM	4	58.1	12.7	14.3	15.1	2.3	17.9	33.2	42.4	14.3	10.0	12.0
6BU[ ]MM	6	60.8	14.3	15.9	16.3	3.8	19.5	34.6	44.1	15.9	11.5	13.0
8BU[ ]MM	8	64.0	15.9	17.5	16.7	5.8	19.1	36.6	48.0	17.5	13.1	14.0
10BU[ ]MM	10	64.2	19.1	19.1	17.5	7.9	19.8	37.3	48.2	19.1	16.5	14.0
12BU[ ]MM	12	74.7	22.2	23.8	24.6	9.9	23.4	43.7	50.8	23.8	19.5	16.0
14BU[ ]MM	14	69.6	23.8	25.4	22.2	11.9	21.0	41.1	50.8	23.8	21.0	16.0
15BU[ ]MM	15	72.5	23.8	25.4	22.2	12.7	21.8	42.1	51.9	23.8	21.0	16.0
16BU[ ]MM	16	74.7	25.4	27.0	25.0	12.7	23.4	43.7	52.4	27.0	22.5	14.0
18BU[ ]MM	18	78.7	28.6	30.2	25.4	15.8	24.6	48.0	58.7	30.2	26.0	17.0
20BU[ ]MM	20	92.0	31.8	33.3	31.0	16.7	27.0	41.8	64.3	33.3	29.0	20.0
22BU[ ]MM	22	89.0	31.8	33.3	27.0	17.9	24.6	53.0	66.6	33.3	29.5	24.0
25BU[ ]MM	25	100.7	38.1	39.7	33.3	21.7	27.4	60.0	71.9	39.7	33.8	24.0

* [ ] see page 9 for material specifications.

Dimensions for reference only. Subject to change.

Metric fitting shown

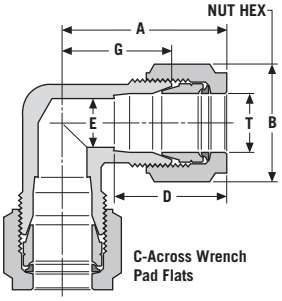

Union Elbow: LU connects fractional tubes

Part Number*	T Tube O.D.	A	B Hex Flat	C	D	E	G
		Dimensions — inches					
1LU[ ]	1/16	.78	5/16	7/16	.41	.05	.56
2LU[ ]	1/8	.97	7/16	7/16	.56	.09	.66
3LU[ ]	3/16	1	1/2	7/16	.59	.13	.69
4LU[ ]	1/4	1.05	9/16	7/16	.64	.19	.72
6LU[ ]	3/8	1.19	11/16	1/2	.72	.28	.84
8LU[ ]	1/2	1.44	7/8	11/16	.97	.42	.97
10LU[ ]	5/8	1.47	1	13/16	1	.50	.03
12LU[ ]	3/4	1.59	1 1/8	1	1	.66	.16
14LU[ ]	7/8	1.72	1 1/4	1 1/4	1.06	.72	.28
16LU[ ]	1	1.88	1 1/2	1 1/4	1.31	.88	.31
20LU[ ]	1 1/4	2.67	1 7/8	1 11/16	1.62	1.09	1.75
24LU[ ]	1 1/2	3.07	2 1/4	2	1.97	1.34	2
32LU32[ ]	2	4.22	3	2 3/4	2.66	1.81	2.75

Union Elbow: LU/MM connects metric tubes

Part Number*	T Tube O.D.	A	B Hex Flat	C	D	E	G
		Dimensions—mm					
3LU[ ]MM	3	24.6	11.1	11.0	14.3	2.2	16.7
4LU[ ]MM	4	25.3	12.7	11.0	15.1	2.3	17.5
6LU[ ]MM	6	26.6	14.3	11.0	16.3	3.8	18.3
8LU[ ]MM	8	28.6	15.9	12.6	16.7	5.8	20.6
10LU[ ]MM	10	32.6	19.1	17.3	17.5	7.9	24.6
12LU[ ]MM	12	36.6	22.2	17.3	24.6	9.9	24.6
14LU[ ]MM	14	34.0	23.8	17.3	22.2	11.9	24.6
15LU[ ]MM	15	36.5	23.8	17.4	22.2	12.7	26.2
16LU[ ]MM	16	37.3	25.4	20.5	25.0	12.7	26.2
18LU[ ]MM	18	39.3	28.6	25.3	25.4	15.8	29.4
20LU[ ]MM	20	46.4	31.8	31.8	31.0	16.7	32.5
22LU[ ]MM	22	43.7	31.8	31.6	27.0	17.9	32.5
25LU[ ]MM	25	47.8	38.1	31.6	33.3	21.8	33.3
30LU[ ]MM	30	69.9	50.8	46	39.2	26.2	48.3
32LU[ ]MM	32	72.3	50.8	46	41.6	28.6	49.3
38LU[ ]MM	38	84	60.3	55	47.9	33.7	56.4

Metric fitting shown

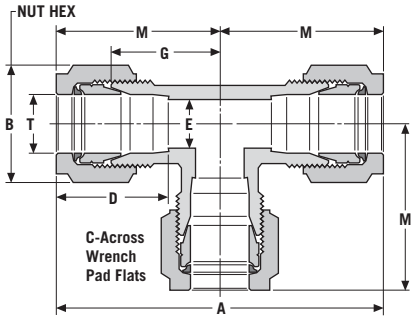

Union Tee: TTT connects fractional tubes

Part Number*	T Tube O.D.	A	B Hex Flat	C	D	E	G	M
		Dimensions — inches						
1TTT[ ]	1/16	1.56	5/16	7/16	.41	.05	.56	.78
2TTT[ ]	1/8	1.94	7/16	7/16	.56	.09	.66	.97
3TTT[ ]	3/16	2	1/2	7/16	.59	.13	.69	1
4TTT[ ]	1/4	2.04	9/16	7/16	.64	.19	.72	1.05
6TTT[ ]	3/8	2.38	11/16	1/2	.72	.28	.84	1.19
8TTT[ ]	1/2	2.88	7/8	11/16	.97	.42	.97	1.44
10TTT[ ]	5/8	2.94	1	13/16	1	.50	1.03	1.47
12TTT[ ]	3/4	3.19	1 1/8	1	1	.66	1.16	1.59
14TTT[ ]	7/8	3.44	1 1/4	1 1/4	1.06	.72	1.28	1.72
16TTT[ ]	1	3.75	1 1/2	1 1/4	1.31	.88	1.31	1.88
20TTT[ ]	1 1/4	5.24	1 7/8	1 11/16	1.53	1.09	1.75	2.62
24TTT[ ]	1 1/2	6.14	2 1/4	2	1.78	1.34	2	3.07
32TTT[ ]	2	8.44	3	2 3/4	2.50	1.81	2.75	4.22

Union Tee: TTT/MM connects metric tubes

Part Number*	T Tube O.D.	A	B Hex Flat	C	D	E	G	M
		Dimensions — mm						
3TTT[ ]MM	3	49.4	11.1	11.1	14.3	2.2	16.8	24.7
4TTT[ ]MM	4	50.7	12.7	11.1	15.1	2.2	17.5	25.4
6TTT[ ]MM	6	53.3	14.3	11.1	16.3	3.8	18.3	26.7
8TTT[ ]MM	8	57.2	15.9	12.7	16.7	5.8	20.6	28.6
10TTT[ ]MM	10	65.2	19.1	17.5	17.5	7.9	24.6	32.6
12TTT[ ]MM	12	73.2	22.2	17.5	24.6	9.9	24.6	36.6
14TTT[ ]MM	14	71.1	23.8	20.7	22.2	11.9	26.2	35.6
15TTT[ ]MM	15	72.9	23.8	20.7	22.2	12.7	26.2	36.5
16TTT[ ]MM	16	74.6	25.4	20.7	25.0	12.7	26.2	37.3
18TTT[ ]MM	18	78.9	28.6	25.4	25.4	15.8	29.5	39.4
20TTT[ ]MM	20	92.7	31.8	31.8	31.0	16.7	32.5	46.4
22TTT[ ]MM	22	87.4	31.8	31.8	27.0	17.9	32.5	43.7
25TTT[ ]MM	25	95.4	38.1	31.8	33.3	21.7	33.3	47.7
30TTT[ ]MM	30	139.7	50.8	46	39.2	26.2	48.3	69.9
32TTT[ ]MM	32	144.6	50.8	46	41.6	28.6	49.3	72.3
38TTT[ ]MM	38	168	60.3	55	47.9	33.7	56.4	84

* [ ] see page 9 for material specifications.

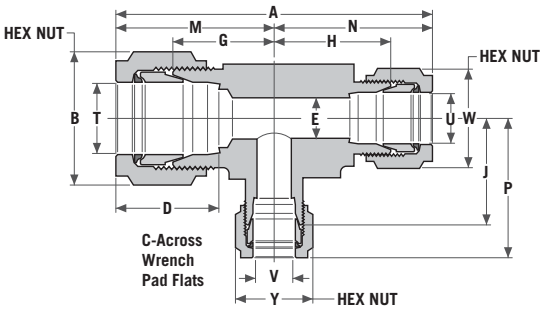

Reducing Run Tee: TTT_B

connects fractional tubes

Part Number* 316 SS	T Tube O.D.	U Run	V Branch	A	B Hex Flat	C	D	E	G	H	J	M	N	P	W Hex Flat	Y Hex Flat
	Dimensions — inches															
10TTT8BR6[ ]	5/8	1/2	3/8	2.94	1	.81	1.11	.42	1.03	1	1.02	1.47	1.47	1.36	7/8	11/16
12TTT10BR6[ ]	3/4	5/8	3/8	3.16	1 1/8	1	1.09	.50	1.16	1.12	1.11	1.60	1.56	1.45	1 1/8	11/16
12TTT10BR8[ ]	3/4	5/8	1/2	3.16	1 1/8	1	1.09	.50	1.16	1.12	1.09	1.60	1.56	1.56	1 1/8	7/8
16TTT10BR6[ ]	1	5/8	3/8	3.60	1 1/2	1.25	1.40	.50	1.31	1.29	1.28	1.87	1.73	1.62	1 1/8	11/16
16TTT10BR8[ ]	1	5/8	1/2	3.60	1 1/2	1.25	1.40	.50	1.31	1.29	1.26	1.87	1.73	1.73	1 1/8	7/8
16TTT12BR6[ ]	1	3/4	3/8	3.62	1 1/2	1.25	1.40	.66	1.31	1.31	1.28	1.87	1.75	1.62	11/16	11/16

Fractional fitting shown

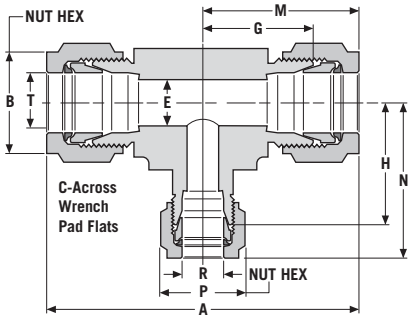

Reducing Branch Tee: TTTB

connects fractional tubes

Part Number* 316 SS	T Tube O.D.	R Branch	A	B Hex Flat	C	E	G	H	M	N	P Hex Flat
	Dimensions — inches										
6TTTB8[ ]	3/8	1/2	2.57	11/16	.68	.28	.94	.97	1.44	1.44	7/8
8TTTB6[ ]	1/2	3/8	2.88	7/8	.68	.42	.97	.99	1.33	1.33	11/16
10TTTB6[ ]	5/8	3/8	2.94	1	.81	.50	1.03	1.02	1.36	1.36	11/16
10TTTB8[ ]	5/8	1/2	2.94	1	.81	.50	1.03	1	1.47	1.47	7/8
12TTTB6[ ]	3/4	3/8	3.20	1 1/8	1	.66	1.16	1.11	1.45	1.45	11/16
12TTTB8[ ]	3/4	1/2	3.20	1 1/8	1	.66	1.16	1.09	1.56	1.56	7/8
16TTTB6[ ]	1	3/8	3.75	1 1/2	1.25	.88	1.31	1.28	1.62	1.62	11/16
16TTTB8[ ]	1	1/2	3.75	1 1/2	1.25	.88	1.31	1.26	1.73	1.73	7/8
20TTTB16[ ]	1 1/4	1	5.27	1 7/8	1.68	1.11	1.75	1.69	2.65	2.29	1 1/2
24TTTB16[ ]	1 1/2	1	6.17	2 1/4	1.68	1.33	2	1.88	3.08	2.48	1 1/2
32TTTB16[ ]	2	1	8.41	3	2.75	1.80	2.75	2.31	4.21	2.90	1 1/2
32TTTB24[ ]	2	1 1/2	8.41	3	2.75	1.80	2.75	2.75	4.21	3.85	2 1/4

Reducing Union Tee: TTTB/MM

connects metric tubes

Part Number*	T Tube O.D	R Branch	A	B Hex Flat	C	E	G	H	M	N	P Hex Flat
	Dimensions — mm										
32TTTB25316MM	32	25	144.6	50.8	46	28.6	49.3	49.1	72.3	449.1	38

* [ ] see page 9 for material specifications.

Dimensions for reference only. Subject to change.

Fractional fitting shown

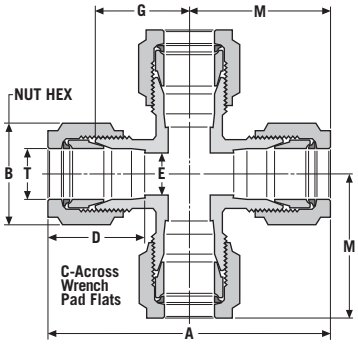

Union Cross: C connects fractional tubes

Part Number*	T Tube O.D.	A	B Hex Flat	C	D	E	G	M
	Dimensions — inches							
1C[ ]	1/16	1.56	5/16	7/16	.41	.05	.56	.78
2C[ ]	1/8	1.94	7/16	7/16	.56	.09	.66	.97
3C[ ]	3/16	2	1/2	7/16	.59	.13	.69	1
4C[ ]	1/4	2.14	9/16	7/16	.64	.19	.72	1.08
6C[ ]	3/8	2.38	11/16	1/2	.72	.28	.84	1.19
8C[ ]	1/2	2.88	7/8	11/16	.97	.42	.97	1.44
10C[ ]	5/8	2.94	1	1 1/16	1	.50	1.03	1.47
12C[ ]	3/4	3.19	1 1/8	1 3/16	1	.66	1.16	1.59
14C[ ]	7/8	3.44	1 1/4	1 7/16	1.06	.72	1.28	1.72
16C[ ]	1	3.75	1 1/2	1 7/16	1.31	.88	1.31	1.88

Union Cross: C/MM connects metric tubes

Part Number*	T Tube O.D.	A	B Hex Flat	C	D	E	G	M
	Dimensions — mm							
3C[ ]MM	3	49.2	11.1	11.1	14.3	2.2	16.7	24.6
4C[ ]MM	4	50.5	12.7	11.1	15.1	2.3	17.5	25.3
6C[ ]MM	6	53.2	14.3	11.1	16.3	3.8	18.2	26.6
8C[ ]MM	8	57.2	15.9	12.7	16.7	5.8	20.6	28.6
10C[ ]MM	10	65.1	19.1	17.5	17.5	7.9	24.6	32.6
12C[ ]MM	12	73.1	22.2	17.5	24.6	9.9	24.6	36.5
14C[ ]MM	14	69.6	23.8	20.7	22.2	11.0	25.4	34.8
15C[ ]MM	15	77.8	23.8	20.7	22.2	12.7	26.2	38.9
16C[ ]MM	16	74.8	25.4	20.7	25.0	12.7	26.2	37.4
18C[ ]MM	18	78.6	29.6	25.4	25.4	15.8	29.4	39.3
20C[ ]MM	20	92.7	31.8	31.8	31.0	16.7	32.5	46.4
22C[ ]MM	22	88.0	31.8	31.8	27.0	17.9	32.5	43.7
25C[ ]MM	25	95.0	38.1	31.8	33.3	21.7	33.3	43.7

* [ ] see page 9 for material specifications.

AN Fittings

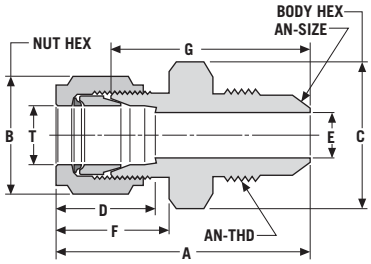

Union, AN: UAN

connects fractional tube to flared tube

Part Number*	T Tube O.D.	AN Size	AN Thread	A	B Hex Flat	C Hex Flat	D	E	F	G
				Dimensions — inches						
1UAN4[ ]	1/16	1/4	7/16-20	1.22	5/16	1/2	.41	.05	.48	1
2UAN2[ ]	1/8	1/8	5/16-24	1.19	7/16	7/16	.56	.06	.67	.97
2UAN4[ ]	1/8	1/4	7/16-20	1.44	7/16	1/2	.56	.09	.67	1.13
3UAN3[ ]	3/16	3/16	3/8-24	1.38	1/2	7/16	.59	.13	.70	1.06
4UAN4[ ]	1/4	1/4	7/16-20	1.52	9/16	1/2	.64	.17	.77	1.19
6UAN4[ ]	3/8	1/4	7/16-20	1.61	11/16	5/8	.72	.17	.83	1.27
6UAN6[ ]	3/8	3/8	9/16-18	1.63	11/16	5/8	.72	.30	.83	1.28
8UAN8[ ]	1/2	1/2	3/4-16	1.88	7/8	13/16	.97	.39	.92	1.41
10UAN10[ ]	5/8	5/8	7/8-14	1.97	1	15/16	1	.48	.92	1.53
12UAN12[ ]	3/4	3/4	1 1/16-12	2.16	1 1/8	1 1/8	1	.61	.97	1.72
16UAN16[ ]	1	1	1 5/16-12	2.50	1 1/2	1 3/8	1.31	.84	1.08	1.94

UAN Application:

GYROLOK® with AND 10056 or MS 33656, 37° flare connections for use with flared tubing.

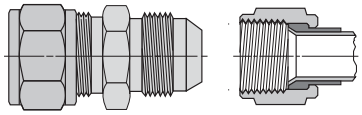

UAN — Mating Part

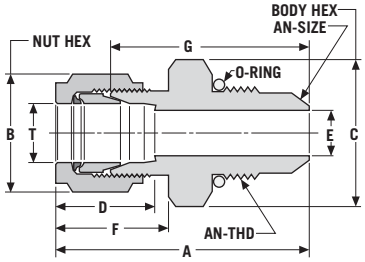

Union, AN O-ring: UANO

connects fractional tube to flared tube

Part Number*	T Tube O.D.	AN Size	AN Thread	A	B	C	D	E	F	G
				Dimensions — inches						
2UAN02[ ]	1/8	1/8	5/16-24 UNF-3A	1.28	7/16	9/16	.56	.06	.67	.97
2UAN04[ ]	1/8	1/4	7/16-20 UNF-3A	1.44	7/16	11/16	.56	.09	.67	1.13
4UAN04[ ]	1/4	1/4	7/16-20 UNF-3A	1.52	9/16	11/16	.64	.17	.77	1.19
4UAN06[ ]	1/4	3/8	9/16-18 UNF-3A	1.58	9/16	13/16	.64	.19	.77	1.25
6UAN04[ ]	3/8	1/4	7/16-20 UNF-3A	1.61	11/16	11/16	.72	.17	.83	1.27
6UAN06[ ]	3/8	3/8	9/16-18 UNF-3A	1.63	11/16	13/16	.72	.28	.83	1.28
8UAN08[ ]	1/2	1/2	3/4-16 UNF-3A	1.88	7/8	1	.97	.39	.92	1.41

UANO Application:

GYROLOK® with AND 10056 or MS 33656 for gasket sealing with AND 10050 or MS 16142 ports.

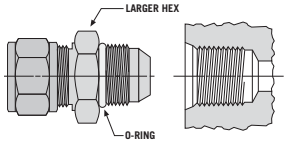

UANO — Mating Part

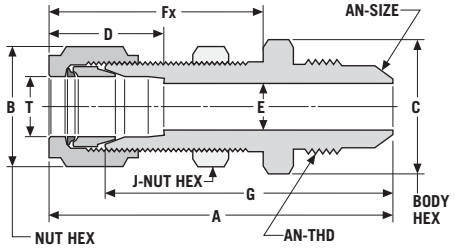

Bulkhead Union, AN: BUAN

connects fractional tube to flared tube

Part Number*	T Tube O.D.	AN Size	AN Thread	A	B	C	D	E	Fx	G	J	Panel Hole	Max. Panel Thick.
				Dimensions — inches									
2BUAN2[ ]	1/8	1/8	5/16-24	1.92	7/16	9/16	.56	.06	1.28	1.61	1/2	21/64	7/16
2BUAN4[ ]	1/8	1/4	7/16-20	2.08	7/16	9/16	.56	.09	1.28	1.77	1/2	21/64	7/16
3BUAN3[ ]	3/16	3/16	3/8-24	2.09	1/2	11/16	.59	.13	1.31	1.78	9/16	25/64	15/32
4BUAN4[ ]	1/4	1/4	7/16-20	2.16	9/16	11/16	.64	.17	1.36	1.83	5/8	29/64	15/32
6BUAN4[ ]	3/8	1/4	7/16-20	2.31	11/16	3/4	.72	.17	1.50	1.97	3/4	37/64	17/32
6BUAN6[ ]	3/8	3/8	9/16-18	2.31	11/16	13/16	.72	.28	1.50	1.97	3/4	37/64	17/32
8BUAN8[ ]	1/2	1/2	3/4-16	2.66	7/8	1	.97	.39	1.72	2.19	15/16	49/64	19/32
10BUAN10[ ]	5/8	5/8	7/8-14	2.80	1	1 1/8	1	.48	1.72	2.36	1 1/16	57/64	9/16
12BUAN12[ ]	3/4	3/4	1 1/16-12	3.34	1 1/8	1 3/8	1	.61	1.91	2.70	1 3/16	1 1/64	21/32
16BUAN16[ ]	1	1	1 5/16-12	3.72	1 1/2	1 5/8	1.31	.84	2.34	3.16	1 9/16	1 21/64	1 1/32

BUAN Application:

GYROLOK® bulkhead configuration AND 10056 or MS 33656, 37° flare connection for use with flared tubing.

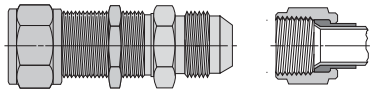

BUAN — Mating Part

* [ ] see page 9 for material specifications.

Dimensions for reference only. Subject to change.

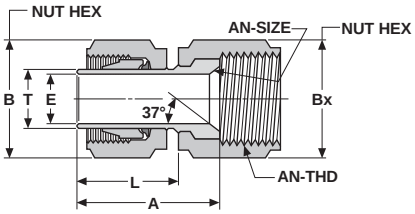

AAN Application:

GYROLOK® tube stub with ferrules pre-set with 37° flare connection for use with AND 10056 or MS 33656 ends.

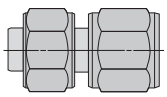

AAN

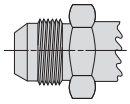

Mating Part

Note: The tube stub end comes with pre-set GYROLOK® ferrules. To assemble, follow GYROLOK® remake instructions, page 58.

Adapter, AN: AAN

connects fractional GYROLOK® port to flared tube

Part Number*	T Tube O.D.	AN Size	AN Thread	A	B Hex Flat	Bx Hex Flat	E	L
				Dimensions — inches				
2AAN2[ ]	1/8	1/8	5/16-24	.92	7/16	3/8	.09	.61
2AAN4[ ]	1/8	1/4	7/16-20	.91	7/16	9/16	.09	.61
3AAN3[ ]	3/16	3/16	3/8-24	1	1/2	7/16	.13	.67
4AAN4[ ]	1/4	1/4	7/16-20	1	9/16	9/16	.19	.70
6AAN6[ ]	3/8	3/8	9/16-18	1.17	11/16	11/16	.28	.78
8AAN8[ ]	1/2	1/2	3/4-16	1.44	7/8	7/8	.39	.98
10AAN10[ ]	5/8	5/8	7/8-14	1.53	1	1	.50	1.09
12AAN12[ ]	3/4	3/4	1 1/16-12	1.59	1 1/8	1 1/4	.59	1.14
16AAN16[ ]	1	1	1 5/16-12	1.84	1 1/2	1 1/2	.80	1.31

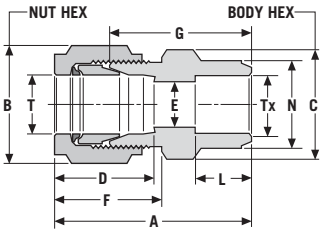

Tube Socket Weld Connector: CW

connects fractional tubes

Part Number*	T Tube O.D.	Tx Tube O.D.	A	B Hex Flat	C Hex Flat	D	E	F	G	L	N
					Dimensions — inches						
2CW2[ ]	1/8	1/8	1.19	7/16	7/16	.56	.09	.67	.88	.25	.31
3CW3[ ]	3/16	3/16	1.27	1/2	7/16	.59	.13	.70	.95	.28	.38
4CW4[ ]	1/4	1/4	1.36	9/16	1/2	.64	.19	.77	1.03	.31	.44
4CW6[ ]	1/4	3/8	1.42	9/16	5/8	.64	.19	.77	1.09	.47	.61
6CW6[ ]	3/8	3/8	1.53	11/16	5/8	.72	.30	.83	1.19	.38	.63
8CW6[ ]	1/2	3/8	1.69	7/8	13/16	.97	.28	.92	1.22	.47	.61
8CW8[ ]	1/2	1/2	1.69	7/8	13/16	.97	.42	.92	1.22	.50	.75
10CW10[ ]	5/8	5/8	1.69	1	15/16	1	.50	.92	1.25	.56	.88
12CW12[ ]	3/4	3/4	1.75	1 1/8	1 1/16	1	.66	.97	1.31	.56	1.06
16CW16[ ]	1	1	2.16	1 1/2	1 3/8	1.31	.88	1.08	1.59	.75	1.31

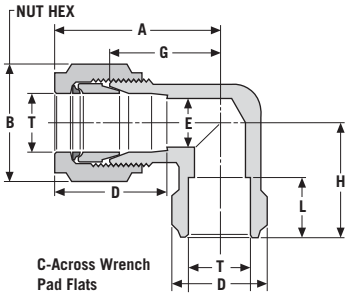

Tube Socket Weld Elbow: LW

connects fractional tubes

Part Number*	T Tube O.D.	A	B Hex Flat	C	D	E	G	H	L	N
				Dimensions — inches						
2LW2[ ]	1/8	.97	7/16	7/16	.56	.09	.66	.66	.25	.48
3LW3[ ]	3/16	1	1/2	7/16	.59	.13	.69	.69	.28	.48
4LW4[ ]	1/4	1.05	9/16	7/16	.64	.19	.72	.72	.31	.48
6LW6[ ]	3/8	1.19	11/16	1/2	.72	.28	.84	.84	.38	.61
8LW8[ ]	1/2	1.44	7/8	11/16	.97	.42	.97	.97	.50	.83
10LW10[ ]	5/8	1.47	1	13/16	1	.50	1.03	1.03	.56	.95
12LW12[ ]	3/4	1.59	1 1/8	1	1	.66	1.16	1.16	.56	1.13
16LW16[ ]	1	1.88	1 1/2	1 1/4	1.31	.88	1.31	1.31	.75	1.38

* [ ] see page 9 for material specifications.

Butt Weld Connector: CBW

connects fractional tube to pipe

Metric fitting shown

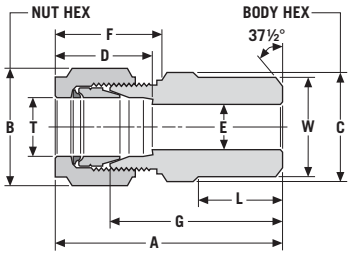

Part Number*	T Tube O.D.	W Butt Weld O.D.	Nom. Pipe Size	A	B Hex Flat	C Hex Flat	D	E	F	G	L
				Dimensions — inches							
2CBW2[ ]	1/8	.41	1/8	1.22	7/16	7/16	.56	.22	.67	.91	.38
3CBW2[ ]	3/16	.41	1/8	1.27	1/2	7/16	.59	.22	.70	.95	.38
4CBW2[ ]	1/4	.41	1/8	1.33	9/16	1/2	.64	.22	.77	1	.38
4CBW4[ ]	1/4	.54	1/4	1.52	9/16	9/16	.64	.30	.77	1.19	.56
6CBW4[ ]	3/8	.54	1/4	1.63	11/16	5/8	.72	.30	.83	1.28	.56
6CBW6[ ]	3/8	.68	3/8	1.63	11/16	11/16	.72	.42	.83	1.28	.56
6CBW8[ ]	3/8	.84	1/2	1.84	11/16	7/8	.72	.55	.83	1.50	.75
8CBW4[ ]	1/2	.54	1/4	1.69	7/8	13/16	.97	.30	.92	1.22	.56
8CBW6[ ]	1/2	.68	3/8	1.78	7/8	13/16	.97	.42	.92	1.31	.56
8CBW8[ ]	1/2	.84	1/2	1.97	7/8	7/8	.97	.55	.92	1.50	.75
10CBW8[ ]	5/8	.84	1/2	1.97	1	15/16	1	.55	.97	1.53	.75
12CBW12[ ]	3/4	1.05	3/4	2.03	1 1/8	1 1/16	1	.78	.97	1.59	.75
16CBW16[ ]	1	1.32	1	2.53	1 1/2	1 3/8	1.31	1	1.08	1.97	.94
20CBW20[ ]	1 1/4	1.66	1 1/4	3.04	2	1 3/4	1.62	1.09	1.53	2.17	.94
24CBW24[ ]	1 1/2	1.90	1 1/2	3.50	2 1/4	2 1/8	1.97	1.34	1.78	2.43	1.03
32CBW32[ ]	2	2.38	2	4.47	3	2 3/4	2.66	1.88	2.47	3	1.06

Butt Weld Connector: CBW/ME

connects metric tube to pipe

Part Number*	T Tube O.D.	W Butt Weld O.D.	Nom. Pipe Size	A	B Hex Flat	C Hex Flat	D	E	F	G	L
				Dimensions — mm							
3CBW2[ ]ME	3	10.3	1/8	31.0	11.1	11.1	14.3	2.2	17.1	23.0	9.5
4CBW2[ ]ME	4	10.3	1/8	34.1	12.7	11.1	15.1	2.4	17.9	26.3	9.5
6CBW2[ ]ME	6	10.3	1/8	35.0	14.3	12.7	16.3	3.8	19.5	26.7	9.5
6CBW4[ ]ME	6	13.7	1/4	39.9	14.3	14.3	16.3	3.8	19.5	31.5	14.3
8CBW2[ ]ME	8	10.3	1/8	34.5	15.9	14.3	16.7	3.8	19.1	26.5	9.5
8CBW4[ ]ME	8	13.7	1/4	39.4	15.9	14.3	16.7	5.8	19.1	31.4	14.3
8CBW6[ ]ME	8	17.2	3/8	39.4	15.9	17.5	16.7	5.8	19.1	31.4	14.2
8CBW8[ ]ME	8	21.5	1/2	45.0	15.9	22.2	16.7	5.8	19.1	37.0	19.1
10CBW4[ ]ME	10	13.7	1/4	40.5	19.1	17.5	17.5	7.7	19.8	32.5	14.3
10CBW6[ ]ME	10	17.2	3/8	41.5	19.1	17.5	17.5	7.9	19.8	33.5	14.2
10CBW8[ ]ME	10	21.3	1/2	46.1	19.1	22.2	17.5	7.9	19.8	38.1	19.1
12CBW4[ ]ME	12	13.7	1/4	43.7	22.2	20.6	24.6	7.7	23.4	31.8	14.3
12CBW6[ ]ME	12	17.2	3/8	44.0	22.2	22.2	24.6	7.9	23.4	32.0	14.2
12CBW8[ ]ME	12	21.3	1/2	50.0	22.2	22.2	23.5	13.9	23.4	38.4	19.1
12CBW12[ ]ME	12	26.7	3/4	51.8	22.2	27.0	24.6	9.9	23.4	39.9	19.1
14CBW8[ ]ME	14	21.3	1/2	47.5	23.8	22.2	22.2	11.9	21.0	38.1	19.1
16CBW8[ ]ME	16	21.3	1/2	50.0	25.4	23.8	25.0	12.7	23.4	38.9	19.1
18CBW8[ ]ME	18	21.3	1/2	51.2	28.6	27.0	25.4	13.8	24.6	41.3	19.1
22CBW16[ ]ME	22	33.4	1	57.4	31.8	34.9	27.0	17.9	24.6	46.2	23.8
25CBW16[ ]ME	25	33.4	1	64.0	38.1	34.9	33.3	21.7	27.4	50.0	23.8

Butt Weld Elbow: LBW

connects fractional tube to pipe

Metric fitting shown

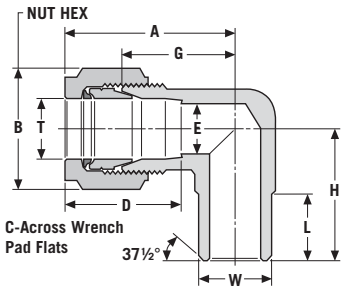

Part Number*	T Tube O.D.	W Butt Weld O.D.	Nom. Pipe Size	A	B Hex Flat	C	D	E	G	H	L
				Dimensions — inches							
2LBW2[ ]	1/8	.41	1/8	.97	7/16	7/16	.56	.09	.66	.72	.41
3LBW2[ ]	3/16	.41	1/8	1	1/2	7/16	.59	.13	.69	.75	.45
4LBW2[ ]	1/4	.41	1/8	1.05	9/16	7/16	.64	.19	.72	.78	.48
4LBW4[ ]	1/4	.54	1/4	1.11	9/16	1/2	.64	.19	.78	.94	—
6LBW4[ ]	3/8	.54	1/4	1.19	11/16	1/2	.72	.28	.84	1	—
8LBW6[ ]	1/2	.68	3/8	1.44	7/8	11/16	.97	.42	.97	1.13	—
8LBW8[ ]	1/2	.84	1/2	1.50	7/8	13/16	.97	.42	1.03	1.31	—
10LBW8[ ]	5/8	.84	1/2	1.47	1	13/16	1	.50	1.03	1.38	—
12LBW12[ ]	3/4	1.05	3/4	1.59	1 1/8	13/16	1	.66	1.16	1.50	—
16LBW12[ ]	1	1.05	3/4	1.88	1 1/2	1 1/4	1.31	.88	1.31	1.66	.86
16LBW16[ ]	1	1.32	1	1.88	1 1/2	1 1/4	1.31	.88	1.31	1.84	—

Butt Weld Elbow: LBW/ME

connects metric to pipe

Part Number*	T Tube O.D.	W Butt Weld O.D.	Nom. Pipe Size	A	B Hex Flat	C	D	E	G	H	L
				Dimensions — mm							
3LBW2[ ]ME	3	10.3	1/8	25.0	11.1	11.0	14.3	2.2	17.0	19.0	9.5
6LBW2[ ]ME	6	10.3	1/8	26.5	14.3	11.0	16.3	3.8	18.5	20.0	9.5
6LBW4[ ]ME	6	13.7	1/4	28.0	14.3	12.5	16.3	3.8	18.5	25.5	14.3
12LBW12[ ]ME	12	26.7	3/4	38.1	22.2	25.4	24.6	9.9	26.2	38.1	19.1
16LBW8[ ]ME	16	21.3	1/2	37.5	25.4	21.5	25.0	12.7	26.0	33.5	19.1
18LBW8[ ]ME	18	21.3	1/2	39.4	28.6	25.4	25.4	13.9	29.5	38.1	19.1

* [ ] see page 9 for material specifications.

Dimensions for reference only. Subject to change.

Fractional fitting shown

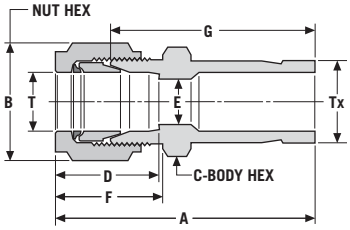

Reducer: R connects fractional tube to fractional port

Part Number*	T Tube O.D.	Tx Tube O.D.	A	B Hex Flat	C Hex Flat	D	E	F	G
			Dimensions — inches						
1R2[ ]	1/16	1/8	1.28	5/16	5/16	.41	.05	.48	1.06
1R4[ ]	1/16	1/4	1.34	5/16	5/16	.41	.05	.48	1.13
2R3[ ]	1/8	3/16	1.50	7/16	7/16	.56	.09	.67	1.19
2R4[ ]	1/8	1/4	1.53	7/16	7/16	.56	.09	.67	1.22
2R6[ ]	1/8	3/8	1.63	7/16	7/16	.56	.09	.67	1.31
2R8[ ]	1/8	1/2	1.84	7/16	9/16	.56	.09	.67	1.53
3R4[ ]	3/16	1/4	1.59	1/2	7/16	.59	.13	.70	1.28
3R6[ ]	3/16	3/8	1.67	1/2	7/16	.59	.13	.70	1.36
3R8[ ]	3/16	1/2	1.88	1/2	9/16	.59	.13	.70	1.56
4R2[ ]	1/4	1/8	1.58	9/16	1/2	.64	.05	.77	1.25
4R4[ ]	1/4	1/4	1.64	9/16	1/2	.64	.19	.77	1.31
4R6[ ]	1/4	3/8	1.73	9/16	1/2	.64	.19	.77	1.41
4R8[ ]	1/4	1/2	1.95	9/16	9/16	.64	.19	.77	1.63
4R10[ ]	1/4	5/8	2.05	9/16	11/16	.64	.19	.77	1.72
4R12[ ]	1/4	3/4	2.14	9/16	13/16	.64	.19	.77	1.81
6R4[ ]	3/8	1/4	1.73	11/16	5/8	.72	.19	.83	1.38
6R6[ ]	3/8	3/8	1.86	11/16	5/8	.72	.28	.83	1.52
6R8[ ]	3/8	1/2	1.03	11/16	5/8	.72	.28	.83	1.69
6R10[ ]	3/8	5/8	2.13	11/16	11/16	.72	.28	.83	1.78
6R12[ ]	3/8	3/4	2.22	11/16	13/16	.72	.28	.83	1.88
6R14[ ]	3/8	7/8	2.25	11/16	15/16	.72	.28	.83	1.91
6R16[ ]	3/8	1	2.45	11/16	1 1/16	.72	.28	.83	2.11
8R4[ ]	1/2	1/4	1.84	7/8	13/16	.97	.13	.92	1.38
8R6[ ]	1/2	3/8	1.94	7/8	13/16	.97	.25	.92	1.47
8R8[ ]	1/2	1/2	2.20	7/8	13/16	.97	.39	.92	1.73
8R10[ ]	1/2	5/8	2.28	7/8	13/16	.97	.42	.92	1.81
8R12[ ]	1/2	3/4	2.34	7/8	13/16	.97	.42	.92	1.88
8R16[ ]	1/2	1	2.56	7/8	1 1/16	.97	.42	.92	2.09
10R12[ ]	5/8	3/4	2.31	1	15/16	1	.50	.92	1.88
10R14[ ]	5/8	7/8	2.38	1	15/16	1	.50	.92	1.94
10R16[ ]	5/8	1	2.50	1	1 1/16	1	.50	.92	2.06
12R14[ ]	3/4	7/8	2.50	1 1/8	1 1/16	1	.66	.97	2.06
12R16 [ ]	3/4	1	2.56	1 1/8	1 1/16	1	.66	.97	2.13
14R16[ ]	7/8	1	2.56	1 1/4	1 3/16	1.06	.72	.97	2.13
16R24[ ]	1	1 1/2	3.51	1 1/2	1 5/8	1.23	.88	1.04	3.03
20R24[ ]	1 1/4	1 1/2	4.10	2 1/4	1 7/8	1.62	1.09	1.53	3.23
20R32[ ]	1 1/4	2	4.93	3	2 1/4	1.62	1.09	1.53	4.06
24R32[ ]	1 1/2	2	5.17	3	2 1/4	1.97	1.34	1.78	4.10

Reducer: R/MM connects metric tube to metric port

Part Number*	T Tube O.D.	Tx Tube O.D.	A	B Hex Flat	C Hex Flat	D	E	F	G
			Dimensions — mm						
3R4[ ]MM	3	4	41.1	11.1	11.1	14.3	2.2	17.1	33.2
3R6[ ]MM	3	6	41.1	11.1	11.1	14.3	2.2	17.1	33.2
3R10[ ]MM	3	10	43.8	11.1	12.7	14.3	2.2	17.1	35.8
4R6[ ]MM	4	6	41.9	12.7	11.1	15.1	2.3	17.9	34.1
4R8[ ]MM	4	8	43.8	12.7	12.7	15.1	2.3	17.9	35.9
4R10[ ]MM	4	10	44.5	12.7	12.7	15.1	2.3	17.9	36.7
6R3[ ]MM	6	3	42.1	14.3	12.7	16.3	2.1	19.5	33.8
6R4[ ]MM	6	4	42.9	14.3	12.7	16.3	2.3	19.5	34.6
6R8[ ]MM	6	8	45.3	14.3	12.7	16.3	3.8	19.5	37.0
6R10[ ]MM	6	10	46.1	14.3	12.7	16.3	3.8	19.5	37.7
6R12[ ]MM	6	12	50.7	14.3	14.3	16.3	3.8	19.5	42.4
6R18[ ]MM	6	18	55.1	14.3	20.6	16.3	3.8	19.5	46.7
8R6[ ]MM	8	6	43.8	15.9	15.9	16.7	4.4	19.1	35.8
8R8[ ]MM	8	8	44.8	15.9	14.3	16.7	5.8	19.1	36.8
8R10[ ]MM	8	10	45.6	15.9	14.3	16.7	5.8	19.1	37.6
8R12[ ]MM	8	12	50.2	15.9	14.3	16.7	5.8	19.1	42.2
8R16[ ]MM	8	16	54.5	15.9	17.5	16.7	5.8	19.1	46.5
10R2[ ]MM	10	2	44.2	19.1	17.5	17.5	1.0	19.8	36.2
10R6[ ]MM	10	6	44.2	19.1	17.5	17.5	4.4	19.8	36.2
10R8[ ]MM	10	8	45.8	19.1	17.5	17.5	6.2	19.8	37.8
10R12[ ]MM	10	12	51.3	19.1	17.5	17.5	7.9	19.8	43.4
10R16[ ]MM	10	16	54.7	19.1	17.5	17.5	7.9	19.8	46.7
10R18[ ]MM	10	18	54.0	19.1	20.6	17.5	7.9	19.8	47.0
10R25[ ]MM	10	25	62.8	19.1	27.0	17.5	7.9	19.8	54.9
12R6[ ]MM	12	6	49.3	22.2	20.6	24.6	4.4	23.4	37.3
12R8[ ]MM	12	8	50.3	22.2	20.6	24.6	6.2	23.4	38.4
12R10[ ]MM	12	10	51.8	22.2	20.6	24.6	7.6	23.4	39.9
12R16[ ]MM	12	16	56.0	22.2	20.6	24.6	9.9	23.4	46.0
12R18[ ]MM	12	18	59.2	22.2	20.6	24.6	9.9	23.4	47.2
12R22[ ]MM	12	22	62.2	22.2	23.8	24.6	9.9	23.4	50.3
12R25[ ]MM	12	25	67.6	22.2	28.6	24.6	9.9	23.4	55.6
14R12[ ]MM	14	12	53.5	23.8	22.2	22.2	9.1	21.0	44.1
15R12[ ]MM	15	12	55.0	23.8	22.2	22.2	9.1	21.8	44.7
16R12[ ]MM	16	12	57.4	25.4	23.8	25.0	9.1	23.4	46.2
18R10[ ]MM	18	10	53.1	28.6	27.0	25.4	12.6	24.6	43.2
18R12[ ]MM	18	12	56.7	28.6	27.0	25.4	9.1	24.6	46.7
18R16[ ]MM	18	16	57.0	28.6	27.0	25.4	9.9	24.6	47.0
18R22[ ]MM	18	22	61.9	28.6	27.0	25.4	15.8	24.6	51.9
18R25[ ]MM	18	25	64.0	28.6	30.0	25.4	15.8	24.6	54.0
25R32[ ]MM	25	32	89.1	38.1	38.1	31.3	21.8	26.5	76.8
30R25[ ]MM	30	25	89.7	50.8	46.0	38.0	19.5	41.2	67.4
32R10[ ]MM	32	10	76.1	50.8	46.0	42.3	7.6	42.9	52.6
32R25[ ]MM	32	25	91.7	50.8	46.0	42.3	19.5	42.9	68.2
38R25[ ]MM	38	25	100.6	60.3	55.6	49.4	19.5	49.5	73.0

Reducing Assemblies Made With GYROLOK® **Fittings**

Use the GYROLOK® Reducer to reduce the size of an existing fitting, there by providing more flexibility in a variety of installations. It comes with a GYROLOK® fitting on one end and a machined tube stub on the other.

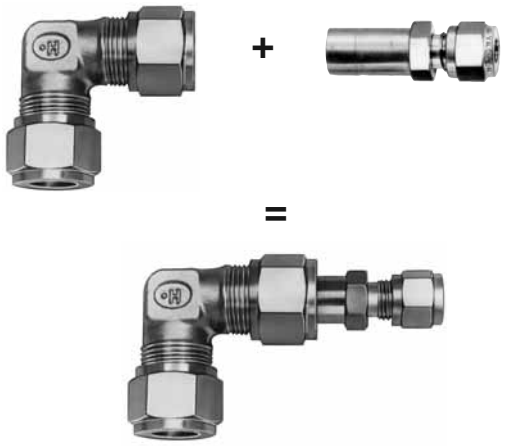

* [ ] see page 9 for material specifications.

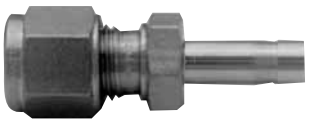

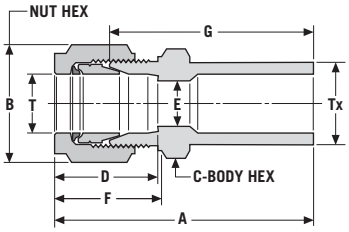

Reducer: R/ME connects metric tube to fractional port

Part Number*	T Tube O.D.	Tx Tube O.D.	A	B Hex Flat	C Hex Flat	D	E	F	G
			Dimensions — mm						
3R2[ ]ME	3	1/8	39.0	11.1	11.1	14.3	2.2	17.1	30.0
3R4[ ]ME	3	1/4	40.0	11.1	11.1	14.3	2.2	17.1	31.0
3R6[ ]ME	3	3/8	43.0	11.1	12.7	14.3	2.2	17.1	34.0
4R4[ ]ME	4	1/4	41.4	12.7	11.1	15.1	2.3	17.9	33.5
6R2[ ]ME	6	1/8	41.1	14.3	12.7	16.3	3.8	19.5	32.8
6R4[ ]ME	6	1/4	42.6	14.3	12.7	16.3	3.8	19.5	34.2
6R6[ ]ME	6	3/8	44.9	14.3	12.7	16.3	3.8	19.5	36.6
6R8[ ]ME	6	1/2	49.8	14.3	14.3	16.3	3.8	19.5	41.4
6R10[ ]ME	6	5/8	52.0	14.3	17.5	16.3	4.6	19.5	43.6
8R6[ ]ME	8	3/8	45.1	15.9	14.3	16.7	5.9	19.1	37.1
8R8[ ]ME	8	1/2	49.2	15.9	14.3	16.7	5.8	19.1	41.2
8R10[ ]ME	8	5/8	53.5	15.9	17.5	16.7	5.8	19.1	45.5
10R6[ ]ME	10	3/8	45.7	19.1	17.5	17.5	7.0	19.8	37.7
10R8[ ]ME	10	1/2	50.6	19.1	17.5	17.5	7.9	19.8	42.6
10R10[ ]ME	10	5/8	53.8	19.1	17.5	17.5	7.9	19.8	45.8
12R8[ ]ME	12	1/2	56.4	22.2	20.6	24.6	9.9	23.4	44.5
12R12[ ]ME	12	3/4	61.5	22.2	20.6	24.6	9.9	23.4	49.5
18R12[ ]ME	18	3/4	61.0	28.6	27.0	25.4	15.0	24.6	51.1
25R16[ ]ME	25	1	64.0	38.1	27.0	33.3	13.8	27.4	54.0

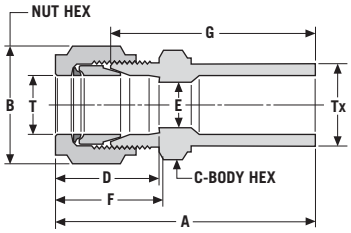

Reducer: R/EM connects fractional tube to metric port

Part Number*	T Tube O.D.	Tx Tube O.D.	A	B Hex Flat	C Hex Flat	D	E	F	G
			Dimensions — inches						
1R3[ ]EM	1/16	3	33.5	7.9	7.9	10.3	1.2	12.3	27.9
1R8[ ]EM	1/16	8	37.3	7.9	11.1	10.3	1.2	12.3	31.8
2R6[ ]EM	1/8	6	38.9	11.1	11.1	14.3	4.5	17.1	30.9
4R3[ ]EM	1/4	3	42.1	14.3	12.7	16.3	2.1	19.5	33.8
4R8[ ]EM	1/4	8	45.2	14.3	12.7	16.3	4.6	19.5	36.8
4R10[ ]EM	1/4	10	46.1	14.3	12.7	16.3	4.6	19.5	37.7
4R12[ ]EM	1/4	12	50.7	14.3	14.3	16.3	4.6	19.5	42.4
4R18[ ]EM	1/4	18	54.1	14.3	20.6	16.3	4.6	19.5	45.7

Metric fitting shown

Bulkhead Adapter: BA connects fractional tube to fractional port

Part Number*	T Tube O.D.	A	B Hex Flat	C Hex Flat	D	E	Fx	G	J Hex Flat	L	Panel Hole Size	Max. Panel Thick.
				Dimensions — inches								
2BA2[ ]	1/8	2.09	7/16	1/2	.56	.09	1.28	1.72	1/2	.63	.33	7/16
3BA3[ ]	3/16	2.16	1/2	9/16	.59	.13	1.31	1.84	9/16	.66	.39	15/32
4BA4[ ]	1/4	2.27	9/16	5/8	.64	.19	1.36	1.94	5/8	.69	.45	15/32
6BA6[ ]	3/8	2.50	11/16	3/4	.72	.28	1.50	2.16	3/4	.78	.58	17/32
8BA8[ ]	1/2	2.94	7/8	15/16	.97	.39	1.72	2.47	15/16	.97	.77	17/32
10BA10[ ]	5/8	3.09	1	1 1/16	1	.50	1.72	2.66	1 1/16	1.08	.89	9/16
12BA12[ ]	3/4	3.38	1 1/8	1 3/16	1	.59	1.91	2.94	1 3/16	1.13	1.02	21/32
14BA14[ ]	7/8	3.63	1 1/4	1 5/16	1.06	.69	2.09	3.19	1 5/16	1.19	1.14	25/32
16BA16[ ]	1	4.14	1 1/2	1 9/16	1.08	.80	2.34	3.58	1 9/16	1.38	1.33	1 1/32

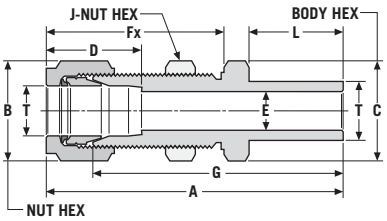

Bulkhead Adapter: BA/MM connects metric tube to metric port

Part Number*	T Tube O.D.	A	B Hex Flat	C Hex Flat	D	E	Fx	G	J Hex Flat	L	Panel Hole Size	Max. Panel Thick.
				Dimensions — mm								
3BA3[ ]MM	3	55.1	11.1	12.7	14.3	2.1	32.5	47.1	12.7	15.9	8.3	12.0
4BA4[ ]MM	4	56.7	12.7	14.3	15.1	2.3	33.2	48.9	14.3	16.7	10.0	12.0
6BA6[ ]MM	6	58.7	14.3	15.9	16.3	3.8	34.6	50.3	15.9	17.3	11.5	13.0
8BA8[ ]MM	8	62.9	15.9	17.5	16.7	5.8	36.6	54.9	17.5	19.1	13.1	14.0
10BA10[ ]MM	10	64.1	19.1	19.1	17.5	7.5	37.3	56.1	19.1	19.9	16.5	14.0
12BA12[ ]MM	12	75.4	22.2	23.8	24.6	9.1	43.7	63.5	23.8	24.5	19.5	16.0
14BA14[ ]MM	14	75.0	23.8	23.8	22.2	11.9	41.1	63.0	23.8	24.5	19.5	16.0
16BA16[ ]MM	16	79.0	25.4	27.0	25.0	12.7	43.7	68.0	27.0	27.3	22.5	14.0
18BA18[ ]MM	18	86.0	28.6	30.0	25.4	13.8	48.0	75.0	30.2	28.2	26.0	17.0
22BA22[ ]MM	22	92.0	31.8	33.5	27.0	17.9	53.0	81.0	33.3	30.0	29.5	24.0
25BA25[ ]MM	25	105.0	38.1	40.0	33.3	18.1	60.0	91.0	39.7	35.4	33.8	24.0

* [ ] see page 9 for material specifications.

Dimensions for reference only. Subject to change.

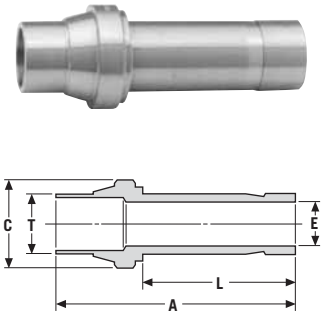

Port Connector: PC

connects two fractional ports

PART NUMBER*	T TUBE OD	DIMENSIONS – INCHES A	C	E	L
1PC[]	1/16	0.74	0.13	0.03	0.54
2PC[]	1/8	1.10	0.25	0.09	0.73
3PC[]	3/16	1.10	0.32	0.19	0.74
4PC[]	1/4	1.24	0.38	0.19	0.84
6PC[]	3/8	1.33	0.50	0.28	0.88
8PC[]	1/2	1.92	0.69	0.39	1.23
10PC[]	5/8	1.96	0.82	0.50	1.25
12PC[]	3/4	1.83	0.94	0.59	1.13
14PC[]	7/8	2.20	1.10	0.69	1.38
16PC[]	1.0	2.57	1.20	0.80	1.63

Port Connector: PC/MM

connects two metric ports

PART NUMBER*	T TUBE OD	DIMENSIONS – MM A	C	E	L
3PC[]MM	3	27.9	6.4	2.2	18.3
4PC[]MM	4	26.1	7.6	2.4	16.7
6PC[]MM	6	31.4	9.3	2.8	21.2
8PC[]MM	8	31.1	11.1	6.4	20.7
10PC[]MM	10	34.2	13.2	7.6	22.6
12PC[]MM	12	48.6	17.5	9.2	31.0
14PC[]MM	14	43.2	19.1	11.1	27.0
15PC[]MM	15	44.5	19.1	11.9	28.6
16PC[]MM	16	50.4	20.7	12.7	31.8
18PC[]MM	18	51.4	23.8	13.9	33.3
20PC[]MM	20	60.6	26.9	15.1	41.3
22PC[]MM	22	54.1	26.9	17.1	34.4
25PC[]MM	25	66.0	31.5	19.5	41.7

Installation Instructions
For Port Connector and Reducing Port Connector, see page 59

GYROLOK® ended ball valve using port connector for close connection to another port.

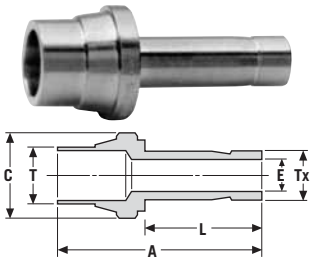

Reducing Port Connector: PC

connects two fractional ports

Part Number*	T Tube O.D.	Tx Reduced Tube O.D.	Dimensions—inches A	C	E	L
2PC1[ ]	1/8	1/16	.84	.25	.03	.47
4PC1[ ]	1/4	1/16	.95	.38	.03	.56
4PC2[ ]	1/4	1/8	1.06	.38	.06	.66
6PC2[ ]	3/8	1/8	1.16	.50	.09	.70
6PC4[ ]	3/8	1/4	1.22	.50	.19	.78
8PC4[ ]	1/2	1/4	1.47	.69	.13	.77
8PC6[ ]	1/2	3/8	1.55	.69	.25	.83
12PC8[ ]	3/4	1/2	2	.94	.33	1.14

Reducing Port Connector: PC/MM

connects two metric ports

Part Number*	T Tube O.D.	Tx Reduced Tube O.D.	Dimensions — mm A	C	E	L
6PC3[ ]MM	6	3	29.9	9.3	2.1	18.1
8PC6[ ]MM	8	6	29.4	11.2	4.4	19.0
10PC6[ ]MM	10	6	31.1	13.2	4.4	19.8
10PC8[ ]MM	10	8	33.7	13.2	6.4	22.2
12PC6[ ]MM	12	6	39.0	17.5	4.4	21.2
12PC8[ ]MM	12	8	40.6	17.5	6.4	23.0
12PC10[ ]MM	12	10	39.4	17.5	7.5	21.7
16PC12[ ]MM	16	12	50.2	20.7	9.2	31.5
18PC16[ ]MM	18	16	50.4	24.0	12.7	32.3
22PC18[ ]MM	22	18	53.6	27.5	13.9	34.0
25PC18[ ]MM	25	18	58.4	32.0	13.9	34.1

* [ ] see page 9 for material specifications.

Fractional shown

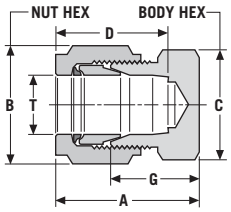

Cap: CP

caps end of fractional tube

Part Number*	T Tube O.D.	A	Dimensions — inches B Hex Flat	C Hex Flat	D	G
1CP[ ]	1/16	.66	5/16	5/16	.41	.44
2CP[ ]	1/8	.91	7/16	7/16	.56	.53
3CP[ ]	3/16	.89	1/2	7/16	.59	.58
4CP[ ]	1/4	.95	9/16	1/2	.64	.63
6CP[ ]	3/8	1.06	11/16	5/8	.72	.72
8CP[ ]	1/2	1.28	7/8	13/16	.97	.81
10CP[ ]	5/8	1.33	1	15/16	1	.89
12CP[ ]	3/4	1.36	1 1/8	1 1/16	1	.92
14CP[ ]	7/8	1.41	1 1/4	1 3/16	1.06	.97
16CP[ ]	1	1.77	1 1/2	1 3/8	1.31	1.20
20CP[ ]	1 1/4	2.10	1 7/8	1 3/4	1.53	1.23
24CP[ ]	1 1/2	2.54	2 1/4	2 1/8	1.78	1.47
32CP[ ]	2	3.41	3	2 3/4	2.47	1.94

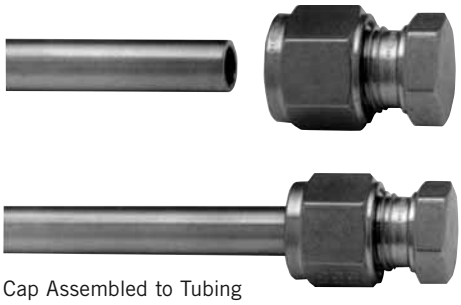

Cap Assembled to Tubing

Assembly Instructions:

1. Insert tube into cap.
2. Follow standard GYROLOK® assembly instructions, page 58.

Tube Cap: CP/MM

caps end of metric tube

Part Number*	T Tube O.D.	A	Dimensions — mm B Hex Flat	C Hex Flat	D	G
3CP[ ]MM	3	22.8	11.1	11.1	14.3	14.8
4CP[ ]MM	4	23.6	12.7	11.1	15.1	15.8
6CP[ ]MM	6	25.3	14.3	12.7	16.3	16.9
8CP[ ]MM	8	25.1	15.9	14.3	16.7	17.1
10CP[ ]MM	10	26.2	19.1	17.5	17.5	18.3
12CP[ ]MM	12	32.6	22.2	20.6	24.6	20.6
14CP[ ]MM	14	31.6	23.8	22.2	22.2	22.2
15CP[ ]MM	15	31.9	23.8	22.2	22.2	21.5
16CP[ ]MM	16	35.0	25.4	23.8	25.0	23.9
18CP[ ]MM	18	33.4	28.6	27.0	25.4	23.4
20CP[ ]MM	20	40.0	31.8	30.2	31.0	25.2
22CP[ ]MM	22	35.8	31.8	30.2	27.0	24.6
25CP[ ]MM	25	45.9	38.1	34.9	33.3	31.5
30CP[ ]MM	30	53.4	50.8	46	39.6	31.8
32CP[ ]MM	32	55.8	50.8	46	42	32.8
38CP[ ]MM	38	65.4	60.3	55	49.4	37.8

Fractional shown

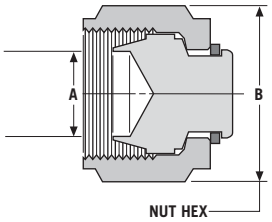

Plug: P fractional for GYROLOK® ports

Part Number*	Dimensions — inches A Fitting Size	B Hex Size
1P[ ]	1/16	5/16
2P[ ]	1/8	7/16
3P[ ]	3/16	1/2
4P[ ]	1/4	9/16
6P[ ]	3/8	11/16
8P[ ]	1/2	7/8
10P[ ]	5/8	1
12P[ ]	3/4	1 1/8
14P[ ]	7/8	1 1/4
16P[ ]	1	1 1/2
20P[ ]	1 1/4	1 7/8
24P[ ]	1 1/2	2 1/4
32P[ ]	2	3

Usage Instructions, see page 59.

Plug Assembled to GYROLOK® Body

Plug: P/MM metric for GYROLOK® ports

Part Number*	Dimensions — mm A Fitting Size	B Hex Size
3P[ ]MM	3	11.1
4P[ ]MM	4	12.7
6P[ ]MM	6	14.3
8P[ ]MM	8	15.9
10P[ ]MM	10	19.1
12P[ ]MM	12	22.2
14P[ ]MM	14	23.8
15P[ ]MM	15	23.8
16P[ ]MM	16	25.4
18P[ ]MM	18	28.6
20P[ ]MM	20	31.8
22P[ ]MM	22	31.8
25P[ ]MM	25	38.1
30P[ ]MM	30	50.8
32P[ ]MM	32	50.8
38P[ ]MM	38	60.3

* [ ] see page 9 for material specifications.

Dimensions for reference only. Subject to change.

Male Thermocouple Connector: CMT (Fractional)

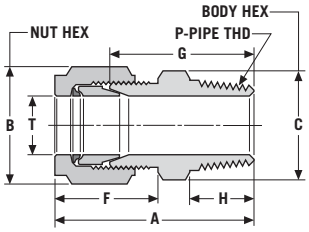

Part Number*	T Tube O.D.	P Pipe Thd.	A	B Hex Flat	C Hex Flat	F	G	H
			Dimensions — inches					
1CMT1[ ]	1/16	1/16	.97	5/16	5/16	.48	.75	.38
1CMT2[ ]	1/16	1/8	1.13	5/16	7/16	.48	.81	.38
1CMT4[ ]	1/16	1/4	1.22	5/16	9/16	.48	1	.56
2CMT2[ ]	1/8	1/8	1.22	7/16	7/16	.67	.91	.38
2CMT4[ ]	1/8	1/4	1.44	7/16	9/16	.67	1.13	.56
3CMT2[ ]	3/16	1/8	1.27	1/2	7/16	.70	.95	.38
3CMT4[ ]	3/16	1/4	1.50	1/2	9/16	.70	1.19	.56
4CMT2[ ]	1/4	1/8	1.33	9/16	1/2	.77	1	.38
4CMT4[ ]	1/4	1/4	1.52	9/16	9/16	.77	1.19	.56
4CMT6[ ]	1/4	3/8	1.58	9/16	11/16	.77	1.25	.56
4CMT8[ ]	1/4	1/2	1.80	9/16	7/8	.77	1.47	.75
6CMT4[ ]	3/8	1/4	1.64	11/16	5/8	.83	1.28	.56
6CMT6[ ]	3/8	3/8	1.63	11/16	11/16	.83	1.28	.56
6CMT8[ ]	3/8	1/2	1.84	11/16	7/8	.83	1.50	.75
8CMT8[ ]	1/2	1/2	1.97	7/8	7/8	.92	1.50	.75
12CMT12[ ]	3/4	3/4	2.08	1 1/8	1 1/16	.97	1.63	.75
20CMT20[ ]	1 1/4	1 1/4	3.06	1 7/8	1 7/8	1.56	2.17	.94

The CMT body does not contain a sizing angle or butt seal. As a result, the thermocouple can be extended beyond the fitting's NPT thread end.

Example: GYROLOK® CMT assembled to thermocouple.

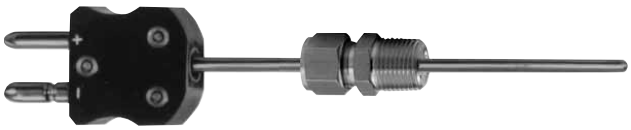

Assembly Instruction:
Because the thermocouple is not bottomed out within the fitting body, follow these simple steps before carrying out GYROLOK® assembly instructions on page 58.

1. Position the length of the thermocouple to extend past the fitting's NPT end.
2. Once correctly positioned, carefully hold thermocouple in place to prevent shifting during assembly

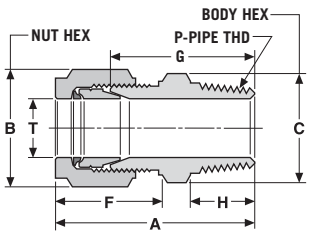

Male Thermocouple Connector: CMT/ME, CMT/MC (Metric)

Metric Tube with NPT or RT tapered threads

Part Number* NPT Threads	Part Number* RT Threads	T Tube O.D.	P Pipe Thd.	A	B Hex Flat	C Hex Flat	F	G	H
				Dimensions — mm					
6CMT2[ ]ME	6CMT2[ ]MC	6	1/8	34.8	14.3	12.7	19.5	26.4	9.5
6CMT4[ ]ME	6CMT4[ ]MC	6	1/4	39.5	14.3	14.3	19.5	31.2	14.3
8CMT4[ ]ME	8CMT4[ ]MC	8	1/4	39.8	15.9	14.3	19.1	31.8	14.2

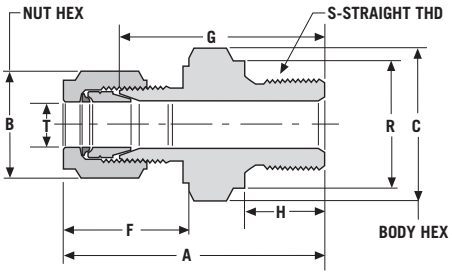

Male Thermocouple Connector: CMT/MA (Metric)

Metric Tube with RS parallel threads

Part Number*	T Tube O.D.	S Straight Thd.	A	B Hex Flat	C Hex Flat	F	G	H	R
			Dimensions — mm						
6CMT4[ ]MA	6	1/4	40.1	14.3	19.1	19.5	31.8	12.0	18.0

RS parallel thread ends are typically used with a gasket having a bonded elastomer seal. RP-type gaskets may also be used.

* [ ] see page 9 for material specifications.

Heat Exchanger Tee: XT

Part Number*	T Tube O.D.	Tx Tube O.D.	A	B Hex Flat	Bx	C	D	E	Ex	G	Gx	M	Mx
				Dimensions — inches									
4XT2[ ]BR4	1/4	1/8	2.02	9/16	7/16	7/16	.64	.19	.13	.72	.66	1.05	.97
8XT4[ ]BR4	1/2	1/4	2.73	7/8	9/16	11/16	.97	.42	.25	.97	.97	1.44	1.30
8XT4[ ]BR8	1/2	1/4	2.73	7/8	9/16	11/16	.97	.42	.25	.97	.91	1.44	1.23

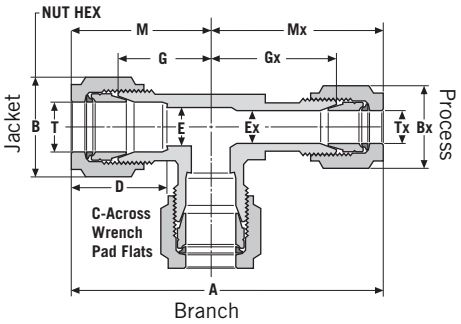

Special Ordering Instructions:
Heat Exchanger Tees are available in other fractional and metric sizes by special order. Ask your HOKE® distributor for price and availability information. Specify "Heat Exchanger Tee" followed by quantity and the desired tube connection sizes.

Example: 8XT4[ ]BR8	**Standard Fitting**
1. Jacket and tubing O.D.	1/2"
2. Process tubing O.D.	1/4"
3. Specify material	*
4. Branch tubing O.D.	1/2"
5. Metric	—

Heat Exchanger Tee Made With GYROLOK® Tube Fittings

Assembly of Tee
Union Tees With Full Port Reducer

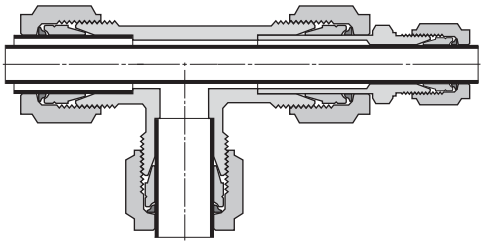

RT

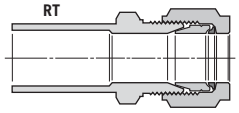

Heat exchanger tees made with GYROLOK® tube fittings can provide additional flexibility as well as reduce costly fitting inventories.

Ordering Instructions
Heat Exchanger Tees can be created with standard union tees and full port reducers to allow process tubing to be inserted into and through the jacket tubing.

To order a full port reducer, add the letter "T" to the core reducer part number.

Example: 8RT12316

* [ ] see page 9 for material specifications.

Dimensions for reference only. Subject to change.

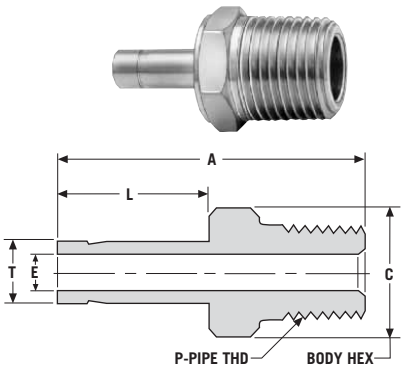

Male Adapter: AM (Fractional)

Part Number*	T Tube O.D.	P Male NPT Size	Dimensions — inches A	C Hex Flat	E	L
1AM1[ ]	1/16	1/16	1	5/16	.03	.47
1AM2[ ]	1/16	1/8	1	7/16	.03	.47
2AM2[ ]	1/8	1/8	1.16	7/16	.09	.63
2AM4[ ]	1/8	1/4	1.34	9/16	.09	.63
3AM2[ ]	3/16	1/8	1.19	7/16	.13	.66
3AM4[ ]	3/16	1/4	1.38	9/16	.13	.66
4AM2[ ]	1/4	1/8	1.25	7/16	.19	.69
4AM4[ ]	1/4	1/4	1.44	9/16	.19	.69
4AM6[ ]	1/4	3/8	1.47	11/16	.19	.69
4AM8[ ]	1/4	1/2	1.69	7/8	.19	.69
6AM2[ ]	3/8	1/8	1.38	7/16	.28	.78
6AM4[ ]	3/8	1/4	1.56	9/16	.28	.78
6AM6[ ]	3/8	3/8	1.56	11/16	.28	.78
6AM8[ ]	3/8	1/2	1.78	7/8	.28	.78
8AM4[ ]	1/2	1/4	1.75	9/16	.39	.97
8AM6[ ]	1/2	3/8	1.78	11/16	.39	.97
8AM8[ ]	1/2	1/2	1.97	7/8	.39	.97
8AM12[ ]	1/2	3/4	1.98	1 1/16	.39	.97
10AM6[ ]	5/8	3/8	1.89	11/16	.50	1.08
10AM8[ ]	5/8	1/2	2.08	7/8	.50	1.08
10AM12[ ]	5/8	3/4	2.14	1 1/16	.50	1.08
12AM8[ ]	3/4	1/2	2.13	7/8	.59	1.13
12AM12[ ]	3/4	3/4	2.16	1 1/16	.59	1.13
12AM16[ ]	3/4	1	2.31	1 3/8	.59	1.13
14AM12[ ]	7/8	3/4	2.22	1 1/16	.69	1.19
16AM12[ ]	1	3/4	2.39	1 1/16	.80	1.38
16AM16[ ]	1	1	2.61	1 3/8	.80	1.38
20AM20[ ]	1 1/4	1 1/4	3.16	1 3/4	1.09	1.72
24AM24[ ]	1 1/2	1 1/2	3.72	2 1/8	1.31	2.06
32AM32[ ]	2	2	4.70	2 3/4	1.75	2.76

20AM20[ ] shown

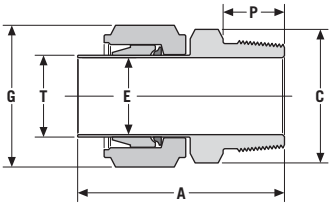

Over 1 inch and over 25 mm Male Adapters feature pre-set ferrules. Follow GYROLOK® ***Reassembly instructions, page 58.***

Male Adapter: AM/MC/ME (Metric) with RT Ends

Part Number*		T Tube O.D.	P Pipe Thd.	Dimensions — mm A	C Hex Flat	E	L
3AM2[ ]MC	3AM2[ ]ME	3	1/8	31.2	11.1	2.1	15.9
3AM4[ ]MC	3AM4[ ]ME	3	1/4	36.7	13.7	2.1	15.9
4AM2[ ]MC	4AM2[ ]ME	4	1/8	32.0	11.1	2.3	16.7
4AM4[ ]MC	4AM4[ ]ME	4	1/4	36.8	14.3	2.3	16.7
6AM2[ ]MC	6AM2[ ]ME	6	1/8	32.6	11.1	4.4	17.3
6AM4[ ]MC	6AM4[ ]ME	6	1/4	37.4	14.3	4.4	17.3
6AM6[ ]MC	6AM6[ ]ME	6	3/8	37.2	17.5	4.4	17.3
6AM8[ ]MC	6AM8[ ]ME	6	1/2	42.7	22.2	4.4	17.3
8AM2[ ]MC	8AM2[ ]ME	8	1/8	34.3	11.1	4.4	19.1
8AM4[ ]MC	8AM4[ ]ME	8	1/4	39.9	14.3	6.2	19.1
8AM6[ ]MC	8AM6[ ]ME	8	3/8	39.9	17.5	6.2	19.1
8AM8[ ]MC	8AM8[ ]ME	8	1/2	46.2	22.2	6.2	19.1
10AM2[ ]MC	10AM2[ ]ME	10	1/8	35.9	11.1	4.6	19.8
10AM4[ ]MC	10AM4[ ]ME	10	1/4	39.9	14.3	7.5	19.8
10AM6[ ]MC	10AM6[ ]ME	10	3/8	40.1	17.5	7.5	19.8
10AM8[ ]MC	10AM8[ ]ME	10	1/2	45.2	22.2	7.5	19.8
12AM4[ ]MC	12AM4[ ]ME	12	1/4	45.5	14.3	7.0	24.5
12AM6[ ]MC	12AM6[ ]ME	12	3/8	46.3	17.5	9.1	24.5
12AM8[ ]MC	12AM8[ ]ME	12	1/2	49.9	22.2	9.1	24.5
14AM4[ ]MC	14AM4[ ]ME	14	1/4	45.1	19.1	7.1	24.5
14AM6[ ]MC	14AM6[ ]ME	14	3/8	45.1	19.1	10.2	24.5
14AM8[ ]MC	14AM8[ ]ME	14	1/2	49.9	22.2	11.0	24.5
15AM8[ ]MC	15AM8[ ]ME	15	1/2	50.8	22.2	11.9	24.5
16AM6[ ]MC	16AM6[ ]ME	16	3/8	48.0	17.5	12.6	27.3
16AM8[ ]MC	16AM8[ ]ME	16	1/2	52.7	22.2	12.6	27.3
16AM12[ ]MC	16AM12[ ]ME	16	3/4	54.0	27.0	12.6	27.3
16AM16[ ]MC	16AM16[ ]ME	16	1	58.6	34.9	12.6	27.3
18AM6[ ]MC	18AM6[ ]ME	18	3/8	55.0	17.5	13.8	28.2
18AM8[ ]MC	18AM8[ ]ME	18	1/2	60.0	22.2	13.8	28.2
18AM12[ ]MC	18AM12[ ]ME	18	3/4	55.4	27.0	13.8	28.2
20AM8[ ]MC	20AM8[ ]ME	20	1/2	60.7	22.2	12.6	33.4
20AM12[ ]MC	20AM12[ ]ME	20	3/4	60.5	27.0	15.1	33.4
22AM8[ ]MC	22AM8[ ]ME	22	1/2	53.0	27.0	15.8	30.0
22AM12[ ]MC	22AM12[ ]ME	22	3/4	61.0	27.0	15.8	30.0
25AM8[ ]MC	25AM8[ ]ME	25	1/2	61.0	27.0	12.6	35.4
25AM12[ ]MC	25AM12[ ]ME	25	3/4	66.8	27.0	15.8	36.0
25AM16[ ]MC	25AM16[ ]ME	25	1	66.8	34.9	19.5	35.5

Eliminate Alignment Problems—Use Adapters

Female Pipe Port

Example: Need to join tubing and a female NPT port at 90° angle to one another.

Male Elbow

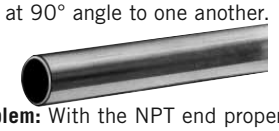

Problem: With the NPT end properly torqued, the tube fitting end of a male elbow may not properly line up with the tubing.

Male Adapter

Solution: Use a male adapter and union elbow. Tighten pipe thread of male adapter to convert the female port into a tube stub end.

Assembly:

1. To connect union elbow to adapter, hold elbow pointing in desired direction and follow standard GYROLOK® assembly Instructions on page 58.

Union Elbow

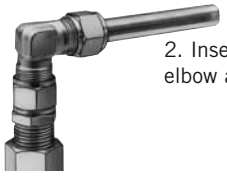

2. Insert tubing into other end of the union elbow and properly connect tubing.

* [ ] see page 9 for material specifications.

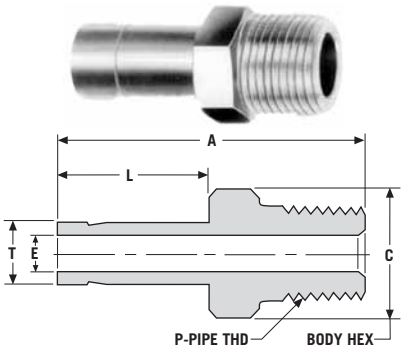

Male Adapter: AM/EC (Fractional)

connects fractional port to female RT tapered threads

Part Number*	T Tube O.D.	P Pipe Thd.	Dimensions — inches A	C Hex Flat	E	L
4AM2[ ]EC	1/4	1/8	1.25	7/16	.19	.69
4AM4[ ]EC	1/4	1/4	1.44	9/16	.19	.69
6AM4[ ]EC	3/8	1/4	1.56	9/16	.28	.78
6AM6[ ]EC	3/8	3/8	1.56	11/16	.28	.78
6AM8[ ]EC	3/8	1/2	1.78	7/8	.28	.78
8AM8[ ]EC	1/2	1/2	1.97	7/8	.39	.97

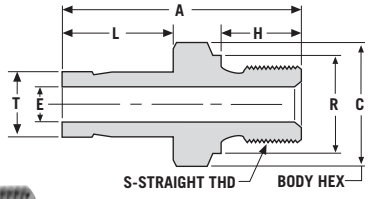

Male Adapter: AM/EA

connects fractional port to female RS parallel threads

Part Number*	T Tube O.D.	S Thd. Size	Dimensions — inches A	C Hex Flat	E	H	L	R
4AM2[ ]EA	1/4	1/8	1.31	5/8	.19	.31	.69	.55
4AM4[ ]EA	1/4	1/4	1.39	3/4	.19	.47	.69	.70
6AM6[ ]EA	3/8	3/8	1.53	15/16	.28	.47	.78	.86
8AM8[ ]EA	1/2	1/2	1.86	1 3/32	.39	.55	.97	1.03

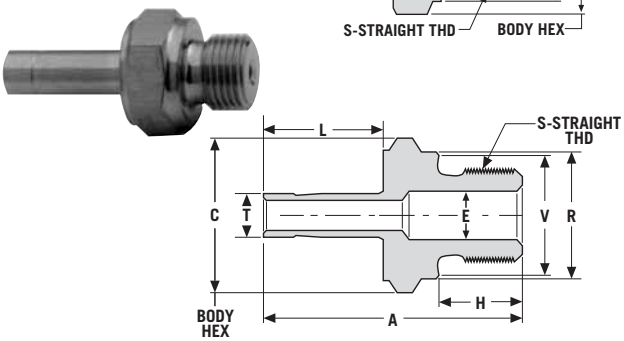

Male Adapter: AM/MB

connects metric port to female ISO straight thread

Part Number*	T Tube O.D.	S Thd. Size	Dimensions — mm A	C Hex Flat	E	H	L	R	V
6AM4[ ]MB	6	1/4	38.1	19.1	4.4	12.0	17.3	18.0	17.0
12AM8[ ]MB	12	1/2	40.1	27.0	9.1	14.0	24.5	26.0	25.0

O-ring Male Adapter: AOM

connects fractional port to female NPT threads

Part Number*	T Tube O.D.	P Pipe Size	Dimensions — inches A	C Hex Flat	E	H	L	N	O-ring I.D.	O-ring O.D.
1AOM2[ ]	1/16	1/8	1.03	3/4	.03	.28	.47	.75	7/16	5/8
2AOM2[ ]	1/8	1/8	1.23	3/4	.09	.28	.63	.75	7/16	5/8
2AOM4[ ]	1/8	1/4	1.36	15/16	.09	.38	.63	.94	9/16	3/4
3AOM2[ ]	3/16	1/8	1.25	3/4	.13	.28	.66	.75	7/16	5/8
3AOM4[ ]	3/16	1/4	1.38	15/16	.13	.38	.66	.94	9/16	3/4
4AOM2[ ]	1/4	1/8	1.31	3/4	.13	.28	.69	.75	7/16	5/8
4AOM4[ ]	1/4	1/4	1.44	15/16	.19	.38	.69	.94	9/16	3/4
4AOM6[ ]	1/4	3/8	1.50	1 1/8	.19	.41	.69	1.13	3/4	15/16
6AOM2[ ]	3/8	1/8	1.38	3/4	.25	.28	.78	.75	7/16	5/8
6AOM4[ ]	3/8	1/4	1.52	15/16	.28	.38	.78	.94	9/16	3/4

To specify O-ring material, see page 10.

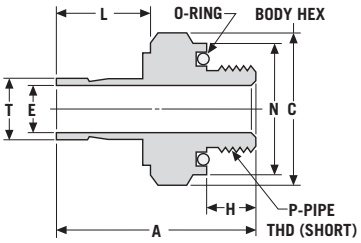

O-ring Male Adapter: AOM/ME

connects metric port to female NPT threads

Part Number*	T Tube O.D.	P Pipe Size	Dimensions — mm A	C Hex Flat	E	H	L	N	O-ring I.D.	O-ring O.D.
6AOM2[ ]ME	6	1/8	32.8	19.1	4.4	7.3	17.3	18.6	11.5	16.6
6AOM4[ ]ME	6	1/4	37.6	23.8	4.4	9.7	17.3	23.4	14.7	19.7
10AOM4[ ]ME	10	1/4	40.1	23.8	7.0	9.7	19.8	23.4	14.7	19.7
10AOM6[ ]ME	10	3/8	40.9	28.6	7.5	10.4	19.8	28.1	19.4	24.5
12AOM6[ ]ME	12	3/8	45.2	28.6	9.1	10.4	24.5	28.1	19.4	24.3
12AOM8[ ]ME	12	1/2	50.8	33.3	9.1	13.6	24.4	32.9	25.6	25.9

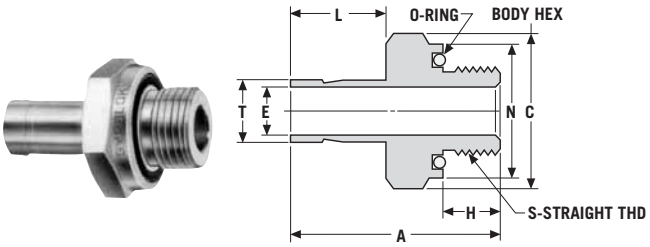

O-ring Straight Adapter: AOS

connects fractional port to female O-ring straight thread

Part Number*	T Tube O.D.	S Thd. Size	Dimensions — inches A	C Hex Flat	E	H	L	N	O-ring I.D.	O-ring O.D.
1AOS[ ]	1/16	5/16-24	1.06	9/16	.03	.34	.47	.56	.31	.44
2AOS[ ]	1/8	5/16-24	1.25	9/16	.09	.34	.63	.56	.31	.44
3AOS[ ]	3/16	3/8-24	1.34	5/8	.13	.38	.66	.63	.38	.50
4AOS[ ]	1/4	7/16-20	1.44	3/4	.19	.41	.69	.75	.44	.63
6AOS[ ]	3/8	9/16-18	1.61	15/16	.28	.47	.78	.94	.56	.75
8AOS[ ]	1/2	3/4-16	1.84	1 1/8	.39	.47	.97	1.13	.75	.94

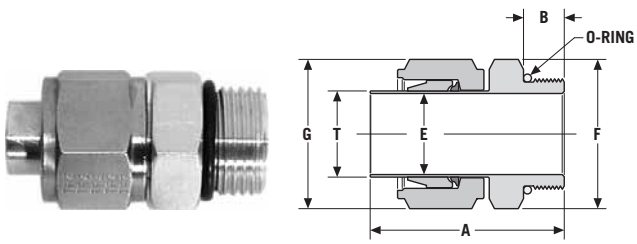

Male SAE Adapter: AMS

connects fractional port to SAE/MS straight thread boss

Part Number	T Tube O.D.	Dimensions—inches S	A	B	E	F	G	O-ring
20AMS20316	1 1/4	1 5/8-12	2.81	.59	1.17	1 7/8	1.88	-920
24AMS24316	1 1/2	1 7/8-12	3.28	.59	1.30	2 1/8	2.25	-924
32AMS32316	2	2 1/2-12	4.24	.59	1.75	2 3/4	3	-932

* [ ] see page 9 for material specifications.

Dimensions for reference only. Subject to change.

Female Adapter: AF

connects fractional port to male NPT thread

Metric fitting shown

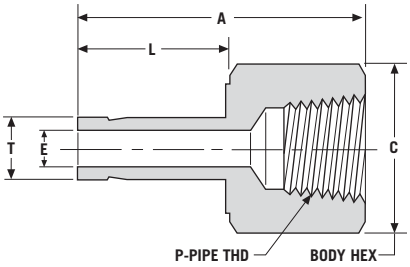

Part Number*	T Tube O.D.	P Pipe Size	Dimensions — inches A	C Hex Flat	E	G Hex Flat	L
2AF2[ ]	1/8	1/8	1.14	9/16	.09	—	.63
2AF4[ ]	1/8	1/4	1.31	3/4	.09	—	.63
3AF2[ ]	3/16	1/8	1.25	9/16	.13	—	.66
3AF4[ ]	3/16	1/4	1.41	3/4	.13	—	.66
4AF2[ ]	1/4	1/8	1.22	9/16	.19	—	.69
4AF4[ ]	1/4	1/4	1.41	3/4	.19	—	.69
4AF6[ ]	1/4	3/8	1.44	7/8	.19	—	.69
4AF8[ ]	1/4	1/2	1.63	1 1/16	.19	—	.69
6AF2[ ]	3/8	1/8	1.31	9/16	.28	—	.78
6AF4[ ]	3/8	1/4	1.50	3/4	.28	—	.78
6AF6[ ]	3/8	3/8	1.53	7/8	.28	—	.78
6AF8[ ]	3/8	1/2	1.72	1 1/16	.28	—	.78
8AF4[ ]	1/2	1/4	1.69	3/4	.39	—	.97
8AF6[ ]	1/2	3/8	1.72	7/8	.39	—	.97
8AF8[ ]	1/2	1/2	1.91	1 1/16	.39	—	.97
10AF6[ ]	5/8	3/8	1.81	7/8	.50	—	1.08
10AF8[ ]	5/8	1/2	2	1 1/16	.50	—	1.08
10AF12[ ]	5/8	3/4	2.09	1 1/4	.50	—	1.08
12AF8[ ]	3/4	1/2	2.06	1 1/16	.59	—	1.13
12AF12[ ]	3/4	3/4	2.13	1 1/4	.59	—	1.13
12AF16[ ]	3/4	1	2.44	1 5/8	.59	—	1.13
14AF12[ ]	7/8	3/4	2.19	1 1/4	.69	—	1.19
16AF8[ ]	1	1/2	2.28	1 1/16	.80	—	1.38
16AF12[ ]	1	3/4	2.38	1 1/4	.80	—	1.38
16AF16[ ]	1	1	2.63	1 5/8	.80	—	1.38
20AF20[ ]	1 1/4	1 1/4	3.06	2 1/8	1.09	1 7/8	—
24AF24[ ]	1 1/2	1 1/2	3.50	2 3/8	1.31	2	—
32AF32[ ]	2	2	4.53	2 7/8	1.75	3	—

20AF20[ ] shown

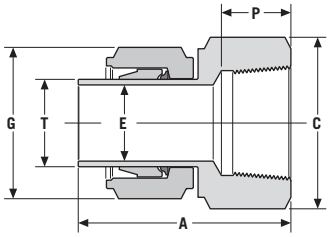

Over 1 inch and over 25 mm Female Adapters feature pre-set ferrules. Use the* GYROLOK® *remake instructions, page 58.

Female Adapter: AF/ME

connects metric port to male NPT thread

Part Number*	T Tube O.D.	P Pipe Size	Dimensions — mm A	C Hex Flat	E	L
3AF2[ ]ME	3	1/8	28.8	14.3	2.1	15.9
3AF4[ ]ME	3	1/4	33.3	19.1	2.1	15.9
6AF2[ ]ME	6	1/8	30.9	14.3	4.4	17.3
6AF4[ ]ME	6	1/4	35.7	19.1	4.4	17.3
6AF6[ ]ME	6	3/8	36.5	22.2	4.4	17.3
6AF8[ ]ME	6	1/2	41.3	27.0	4.4	17.3
8AF2[ ]ME	8	1/8	32.8	14.3	6.2	19.1
8AF4[ ]ME	8	1/4	37.5	19.1	6.2	19.1
8AF6[ ]ME	8	3/8	40.4	22.2	6.2	19.1
8AF8[ ]ME	8	1/2	43.9	27.0	6.2	19.1
10AF2[ ]ME	10	1/8	33.3	14.3	7.5	19.8
10AF4[ ]ME	10	1/4	38.1	19.1	7.5	19.8
10AF6[ ]ME	10	3/8	38.9	22.2	7.5	19.8
10AF8[ ]ME	10	1/2	43.7	27.0	7.5	19.8
12AF4[ ]ME	12	1/4	42.9	19.1	9.1	24.5
12AF6[ ]ME	12	3/8	44.7	22.2	9.1	24.5
12AF8[ ]ME	12	1/2	48.4	27.0	9.1	24.5
12AF12[ ]ME	12	3/4	53.3	31.8	9.1	24.5
14AF4[ ]ME	14	1/4	43.0	19.1	10.2	24.5
14AF8[ ]ME	14	1/2	47.5	27.0	11.0	24.5
15AF8[ ]ME	15	1/2	48.4	27.0	11.9	24.5
16AF6[ ]ME	16	3/8	46.0	22.2	12.6	27.3
16AF8[ ]ME	16	1/2	50.8	27.0	12.6	27.3
16AF12[ ]ME	16	3/4	53.0	31.8	12.6	27.3
18AF6[ ]ME	18	3/8	49.0	22.2	13.8	28.2
18AF8[ ]ME	18	1/2	51.8	27.0	13.8	28.2
18AF12[ ]ME	18	3/4	56.0	31.8	13.8	28.2
20AF8[ ]ME	20	1/2	57.2	27.0	15.1	33.4
20AF12[ ]ME	20	3/4	58.7	31.8	15.1	33.4
22AF8[ ]ME	22	1/2	54.0	27.0	15.8	30.0
22AF12[ ]ME	22	3/4	56.0	31.8	15.8	30.0
25AF8[ ]ME	25	1/2	60.0	27.0	19.3	35.5
25AF12[ ]ME	25	3/4	61.7	31.8	19.3	35.5
25AF16[ ]ME	25	1	67.2	41.3	19.5	35.5

* [ ] see page 9 for material specifications.

Union Tee Plus Adapter Assemblies Help Eliminate Costly Inventory

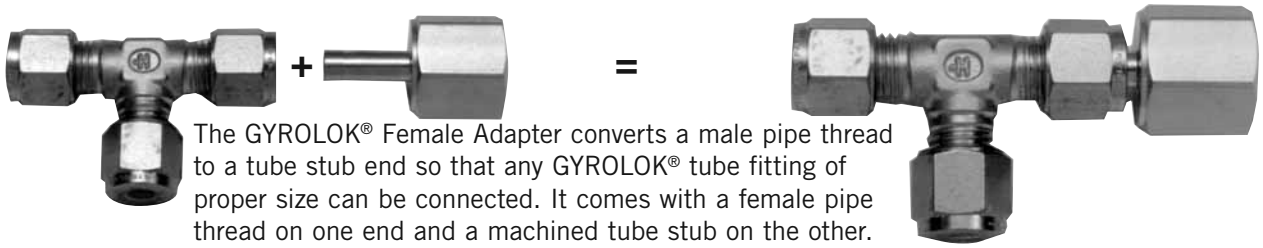

The GYROLOK® Female Adapter converts a male pipe thread to a tube stub end so that any GYROLOK® tube fitting of proper size can be connected. It comes with a female pipe thread on one end and a machined tube stub on the other. By using adapters with union tees, you'll need fewer male or female branch tees and run tees.

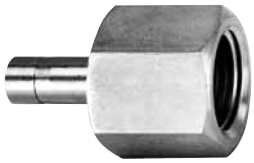

Fractional fitting shown

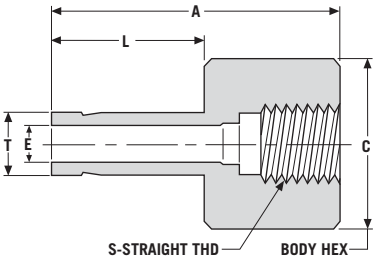

Female Adapter: AF/EZ

connects fractional port to male RG parallel threads (gauge)

Part Number*	T Tube O.D.	S Thd. Size	Dimensions — inches A	C Hex Flat	E	L
4AF4[ ]EZ	1/4	1/4	1.42	3/4	.19	.69
4AF8[ ]EZ	1/4	1/2	1.83	1 1/16	.19	.69
8AF4[ ]EZ	1/2	1/4	1.53	3/4	.22	.97
8AF8[ ]EZ	1/2	1/2	2	1 1/16	.28	.97

Female Adapter: AF/MZ

connects metric port to male RG parallel threads (gauge)

Part Number*	T Tube O.D.	S Straight Thd.	Dimensions — mm A	C Hex Flat	E	L
6AF4[ ]MZ	6	1/4	37.0	19.1	4.5	17.3
6AF8[ ]MZ	6	1/2	46.3	27.0	4.5	17.3
8AF4[ ]MZ	8	1/4	35.7	19.1	6.4	19.1
8AF8[ ]MZ	8	1/2	47.2	27.0	6.4	19.1
10AF4[ ]MZ	10	1/4	36.5	19.1	7.0	19.8
10AF8[ ]MZ	10	1/2	47.4	30.2	7.0	19.8
12AF4[ ]MZ	12	1/4	41.2	19.1	9.2	24.5
12AF8[ ]MZ	12	1/2	46.7	27.0	9.2	24.5
14AF8[ ]MZ	14	1/2	46.7	27.0	11.1	24.5
16AF8[ ]MZ	16	1/2	49.5	27.0	12.7	27.3
18AF8[ ]MZ	18	1/2	56.1	27.0	13.9	27.9
22AF8[ ]MZ	22	1/2	57.9	27.0	17.0	29.7
25AF8[ ]MZ	25	1/2	63.7	27.0	19.4	35.5

RG female thread ends require a gasket inserted into the bottom of the port. The male end, when assembled, exerts pressure on the gasket, creating a seal.

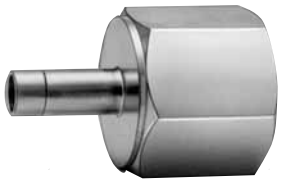

Metric fitting shown

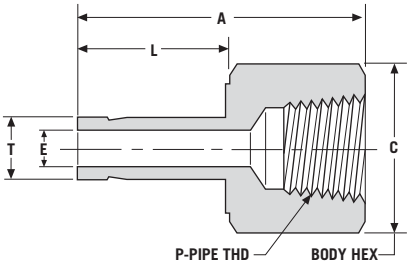

Female Adapter: AF/EC

connects fractional port to male RT tapered threads

Part Number*	T Tube O.D.	S Thd. Size	Dimensions — inches A	C Hex Flat	E	L
4AF2[ ]EC	1/4	1/8	1.22	9/16	.19	.69
4AF4[ ]EC	1/4	1/4	1.41	3/4	.19	.69
6AF6[ ]EC	3/8	3/8	1.53	7/8	.28	.78
8AF8[ ]EC	1/2	1/2	1.91	1 1/16	.39	.97

Female Adapter: AF/MC

connects metric port to male RT tapered threads

Part Number*	T Tube O.D.	P Pipe Thd.	Dimensions — mm A	C Hex Flat	E	L
3AF2[ ]MC	3	1/8	28.8	14.3	2.1	15.9
3AF4[ ]MC	3	1/4	33.3	19.1	2.1	15.9
6AF2[ ]MC	6	1/8	30.9	14.3	4.4	17.3
6AF4[ ]MC	6	1/4	35.7	19.1	4.4	17.3
6AF6[ ]MC	6	3/8	36.5	22.2	4.4	17.3
6AF8[ ]MC	6	1/2	41.3	27.0	4.4	17.3
8AF2[ ]MC	8	1/8	32.8	14.3	6.2	19.1
8AF4[ ]MC	8	1/4	37.5	19.1	6.2	19.1
8AF6[ ]MC	8	3/8	40.4	22.2	6.2	19.1
8AF8[ ]MC	8	1/2	43.9	27.0	6.2	19.1
10AF2[ ]MC	10	1/8	33.3	14.3	7.5	19.8
10AF4[ ]MC	10	1/4	38.1	19.1	7.5	19.8
10AF6[ ]MC	10	3/8	38.9	22.2	7.5	19.8
10AF8[ ]MC	10	1/2	43.7	27.0	7.5	19.8
12AF4[ ]MC	12	1/4	42.9	19.1	9.1	24.5
12AF6[ ]MC	12	3/8	44.7	22.2	9.1	24.5
12AF8[ ]MC	12	1/2	48.4	27.0	9.1	24.5
12AF12[ ]MC	12	3/4	53.3	31.8	9.1	24.5

* [ ] see page 9 for material specifications.

Dimensions for reference only. Subject to change.

Front Ferrule: FF (Fractional)

Part Number*	T Tube O.D.—inches
1FF[ ]	1/16
2FF[ ]	1/8
3FF[ ]	3/16
4FF[ ]	¼
6FF[ ]	3/8
8FF[ ]	½
10FF[ ]	5/8
12FF[ ]	¾
14FF[ ]	7/8
16FF[ ]	1
20FF[ ]	1¼
24FF[ ]	1½
32FF[ ]	2

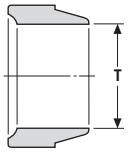

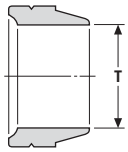

Front Ferrule FF/MM (Metric)

Part Number*	T Tube O.D.—mm
3FF[ ]MM	3
4FF[ ]MM	4
6FF[ ]MM	6
8FF[ ]MM	8
10FF[ ]MM	10
12FF[ ]MM	12
14FF[ ]MM	14
15FF[ ]MM	15
16FF[ ]MM	16
18FF[ ]MM	18
20FF[ ]MM	20
22FF[ ]MM	22
25FF[ ]MM	25
30FF[ ]MM	30
32FF[ ]MM	32
38FF[ ]MM	38

Rear Ferrule: FR (Fractional)

Part Number*	T Tube O.D.—inches
1FR[ ]	1/16
2FR[ ]	1/8
3FR[ ]	3/16
4FR[ ]	¼
6FR[ ]	3/8
8FR[ ]	½
10FR[ ]	5/8
12FR[ ]	¾
14FR[ ]	7/8
16FR[ ]	1
20FR[ ]	1¼
24FR[ ]	1½
32FR[ ]	2

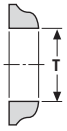

Rear Ferrule FR/MM (Metric)

Part Number*	T Tube O.D.—mm
3FR[ ]MM	3
4FR[ ]MM	4
6FR[ ]MM	6
8FR[ ]MM	8
10FR[ ]MM	10
12FR[ ]MM	12
14FR[ ]MM	14
15FR[ ]MM	15
16FR[ ]MM	16
18FR[ ]MM	18
20FR[ ]MM	20
22FR[ ]MM	22
25FR[ ]MM	25
30FR[ ]MM	30
32FR[ ]MM	32
38FR[ ]MM	38

Nylon front and rear ferrules are available in both fractional and metric.

Note: Stainless steel front ferrules larger than 1" and 25mm are PFA coated.

Nut: N (Fractional)

Part Number*	T Tube O.D.	Dimensions—inches B	L
1N[ ]	1/16	5/16	0.33
2N[ ]	1/8	7/16	0.52
3N[ ]	3/16	½	0.52
4N[ ]	¼	9/16	0.53
6N[ ]	3/8	11/16	0.59
8N[ ]	½	7/8	0.70
10N[ ]	5/8	1	0.70
12N[ ]	¾	11/8	0.72
14N[ ]	7/8	1¼	0.78
16N[ ]	1	1½	0.78
20N[ ]	1¼	17/8	1.25
24N[ ]	1½	2¼	1.50
32N[ ]	2	3	2.06

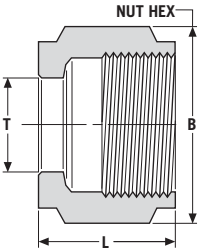

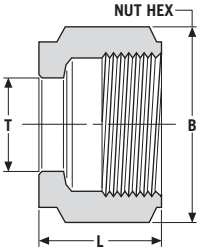

Nut: N/MM (Metric)

Part Number*	T Tube O.D.	Dimensions—mm B	L
3N[ ]MM	3	11.1	13.1
4N[ ]MM	4	12.7	13.3
6N[ ]MM	6	14.3	13.4
8N[ ]MM	8	15.9	14.1
10N[ ]MM	10	19.1	15.0
12N[ ]MM	12	22.2	17.9
14N[ ]MM	14	23.8	16.8
15N[ ]MM	15	23.8	16.8
16N[ ]MM	16	25.4	17.8
18N[ ]MM	18	28.6	18.4
20N[ ]MM	20	31.8	20.0
22N[ ]MM	22	31.8	20.0
25N[ ]MM	25	38.1	21.3
30N[ ]MM	30	50.8	32.8
32N[ ]MM	32	50.8	34.4
38N[ ]MM	38	60.3	40.6

* [ ] see page 9 for material specifications.

Bulkhead Nut: BN (Fractional)

Part Number*	Dimensions—inches L	J
1BN[ ]	1/8	3/8
2BN[ ]	7/32	½
3BN[ ]	7/32	9/16
4BN[ ]	¼	5/8
6BN[ ]	17/64	¾
8BN[ ]	5/16	15/16
10BN[ ]	23/64	11/16
12BN[ ]	13/32	13/16
14BN[ ]	13/32	15/16
16BN[ ]	13/32	19/16
24BN[ ]	½	2¼
32BN[ ]	½	2¾

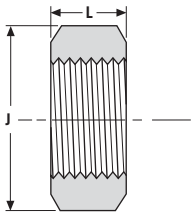

Bulkhead Nut: BN/MM (Metric)

Part Number*	Fitting Size mm	Dimensions—mm L	J
2BN[ ]	3	5.5	12.7
3BN[ ]	4	5.5	14.3
4BN[ ]	6	6.4	15.9
8BN[ ]MM	8	6.4	17.5
10BN[ ]MM	10	6.7	19.1
8BN[ ]	12	7.9	23.8
14BN[ ]MM	14 or 15	7.9	23.8
10BN[ ]	16	9.1	27.0
12BN[ ]	18	10.3	30.2
14BN[ ]	20 or 22	10.3	33.3
16BN[ ]	25	10.3	39.7

Knurled Nut: KN (Fractional)

Part Number*	T Tube O.D.	Dimensions—inches B	L
1KN[ ]	1/16	5/16	0.36
2KN[ ]	1/8	7/16	0.52
3KN[ ]	3/16	½	0.52
4KN[ ]	¼	9/16	0.53
6KN[ ]	3/8	11/16	0.59
8KN[ ]	½	7/8	0.70
10KN[ ]	5/8	1	0.70
12KN[ ]	¾	11/8	0.72
14KN[ ]	7/8	1¼	0.78
16KN[ ]	1	1½	0.78

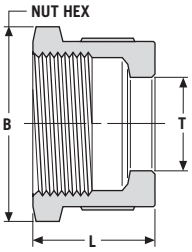

GYROLOK® Fittings are available with knurled nuts and nylon ferrules for use with polyethylene tubing. Hand-tightening allows for quick, easy assembly and disassembly, while providing a leak-tight seal, ideally suited for laboratory hookups. Use such fittings with glass and other hard wall tubing materials.

To order, simply add **KNN** to the basic part number.
Example: **4CM4** with a knurled nut and nylon ferrules would be **4CM4KNN**.

Screen: SCRN

GYROLOK®		
4SCRN316	¼	0.05
6SCRN316	3/8	0.05

Use to prevent insects from entering open vent lines.
Usage Instructions:
1. Substitute screen for rear ferrule in an open GYROLOK®-ended line. (No tubing connected.)
2. Finger-tighten nut.

Safety Changer Nut & Ferrule Sets: SCNF

Each **SCNF** contains 5 nut and ferrule sets. A nut and ferrule set consists of 1 nut, 1 front ferrule and 1 rear ferrule.

Safety Changer Ferrule Sets: SCF

Each **SCF** contains 10 ferrule sets as noted. A ferrule set consists of 1 front ferrule and 1 rear ferrule.

Provides a safe, easy, correct way to reuse existing fittings and valves with new GYROLOK® components. Color coding differentiates metric and fractional parts and materials.

Fractional

Part Number*	Nut & Ferrule Sets/Changer	Tube O.D.— inches
1SCNF[ ]	5	1/16
2SCNF[ ]	5	1/8
3SCNF[ ]	5	3/16
4SCNF[ ]	5	¼
6SCNF[ ]	5	3/8
8SCNF[ ]	5	½
10SCNF[ ]	5	5/8
12SCNF[ ]	5	¾
16SCNF[ ]	5	1

Metric

		mm
3SCNF[ ]MM	5	3
6SCNF[ ]MM	5	6
8SCNF[ ]MM	5	8
10SCNF[ ]MM	5	10
12SCNF[ ]MM	5	12

Color Coded Package:
Green: Fractional Brass, Fractional 316 Stainless Steel
Blue: Metric

How to Order
Add designated material to part number. For example:
Brass = **BR**
316 Stainless Steel = **316**
MONEL® = **M**
Example: 2SCNF316 (5 nut and ferrule sets for 1/8" tubing in 316 Stainless Steel.)

Fractional

Part Number*	Nut & Ferrule Sets/Changer	Tube O.D.— inches
1SCF[ ]	10	1/16
2SCF[ ]	10	1/8
3SCF[ ]	10	3/16
4SCF[ ]	10	¼
6SCF[ ]	10	3/8
8SCF[ ]	10	½
10SCF[ ]	10	5/8
12SCF[ ]	10	¾
16SCF[ ]	10	1

Metric

Part Number*	Nut & Ferrule Sets/Changer	Tube O.D.— mm
3SCF[ ]MM	10	3
6SCF[ ]MM	10	6
8SCF[ ]MM	10	8
10SCF[ ]MM	10	10
12SCF[ ]MM	10	12

* [ ] see page 9 for material specifications.

Dimensions for reference only. Subject to change.

Tube Inserts

GYROLOK® tube fittings may be used with various types of plastic tube material without any special preparation. Use tube inserts to support soft types of tubing, such as Tygon or polyvinyl chloride, prior to insertion into a GYROLOK® end. See chart at right for recommendations.

Tubing Material	Front Ferrule	Rear Ferrule	Tube Insert Usage
Polyethylene	Metal Nylon	Metal Nylon	Not normally required
Nylon	Metal Nylon	Metal Nylon	Not normally required
PTFE	Metal PTFE	Metal PTFE or Metal	Not normally required
Rigid PVC	Metal PTFE*	Metal PTFE*	None
Soft Polyvinyl Chloride or Tygon	Metal Nylon	Metal Nylon	Recommended

* Limited gripping, metal provides tighter grip for higher pressures.

Usage Instructions

1. Fully insert Tube Insert into plastic tubing, where appropriate.
2. If using standard nut, follow standard GYROLOK® assembly instructions, page 58 Manual Assembly Instructions.
3. For finger-tight assembly, standard Brass fittings are available with knurled nuts and nylon ferrules.

Example:

4	TI	2	316
Tube O.D. in sixteenths of an inch — 1/4"	**Type Fitting** (Tube Insert)	**Tube I.D.** in sixteenths of an inch — 1/8" (Except .170 I.D.)	**Material** Brass = BR 316SS = 316

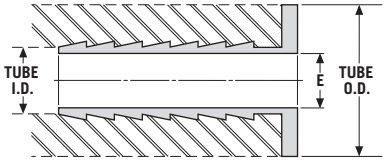

Part Number*	Tube O.D.	Pipe Size	Dimensions — inches E
3TI2[ ]	3/16	1/8	.09
4TI2[ ]	1/4	1/8	.09
4TI.170[ ]	1/4	.170	.11
4TI3[ ]	1/4	3/16	.13
6TI3[ ]	3/8	3/16	.13
6TI4[ ]	3/8	1/4	.19
8TI4[ ]	1/2	1/4	.19
8TI6[ ]	1/2	3/8	.28
10TI6[ ]	5/8	3/8	.28
10TI8[ ]	5/8	1/2	.42
12TI8[ ]	3/4	1/2	.42
12TI10[ ]	3/4	5/8	.50
14TI10[ ]	7/8	5/8	.50
14TI12[ ]	7/8	3/4	.66
16TI12[ ]	1	3/4	.66
16TI14[ ]	1	7/8	.72

Tube Insert: TI/MM (Metric)

Part Number*	T Tube O.D.	Tube I.D.	Dimensions — mm E
6TI4[ ]MM	6	4	2.2
8TI6[ ]MM	8	6	4.3
10TI8[ ]MM	10	8	6.3
12TI10[ ]MM	12	10	7.9

Tube Insert: TI/ME (Metric)

Part Number*	T Tube O.D.	Tube I.D.	Dimensions — mm E
8TI4[ ]ME	8	1/4	4.7

GYROLOK® Used With Plastic Tubing and Tube Insert

* [ ] see page 9 for material specifications.

GYROLOK® **Calibration Fittings**

GYROLOK® Calibration Fittings save time and money by reducing the time required to calibrate differential pressure transmitters. HOKE's calibration fittings, constructed of 316 Stainless Steel, combine a straight thread and conical metal-to-metal sealing surface on one end with a 1/4" GYROLOK® tube fitting on the other. This design allows the technician to easily calibrate the transmitter – in place – without removing the pipe plug/bleed port tap assemblies. No PTFE tape is required. GYROLOK®'s exclusive Controlled Ferrule Drive increases value – extending cycle life.

Features	**Benefits**
Straight Thread/Metal-to-Metal Sealing:	• Ease of installation
Controlled Ferrule Drive:	• Greatly extends remake life • Protects tubing from overstressing
Butt Seal:	• Maximizes seal integrity and user safety
Sizing Angle:	• Reduces tube sticking
Nut and Ferrule Safety Changer:	• Safe, simple component replacement

Dimensions (Fractional)

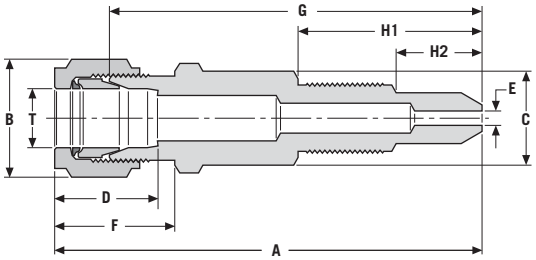

Part Number	T Tube O.D.	Straight Thread	A	B	C	D	E	F	G	H1	H2
			Dimensions — inches								
CM005[ ]	1/4	1/4-28	1 23/32	9/16	1/2	41/64	1/16	49/64	1 13/32	25/32	27/64
CM009[ ]	1/4	5/16-24	2 11/32	9/16	1/2	41/64	1/16	49/64	2 1/32	1	25/64

CM005 – For use with Honeywell transmitters
CM009 – For use with Rosemount or Foxboro transmitters

Lapped Flange Connector

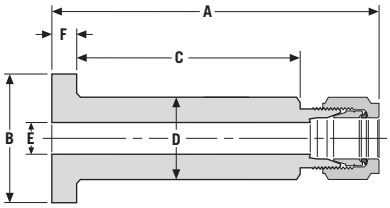

Lapped Flange Connector: CLF (Fractional)

Part Number	T Tube O.D.	Flange Seal	A	B	C	D	E	F	Finish
			Dimensions — inches						
4CLFA[ ]	1/4	A	3.33	1.38	2.28	.88	.19	.25	3.2 – 6.3 Micrometer (Ra)
4CLFB[ ]	1/4	B	3.33	1.38	2.28	.88	.19	.25	6.3 – 12.5 Micrometer (Ra)
6CLFA[ ]	3/8	A	3.34	1.38	2.28	.88	.28	.25	3.2 – 6.3 Micrometer (Ra)
6CLFB[ ]	3/8	B	3.34	1.38	2.28	.88	.28	.25	6.3 – 12.5 Micrometer (Ra)
8CLFA[ ]	1/2	A	3.47	1.38	2.28	.88	.42	.25	3.2 – 6.3 Micrometer (Ra)
8CLFB[ ]	1/2	B	3.47	1.38	2.28	.88	.42	.25	6.3 – 12.5 Micrometer (Ra)

Lapped Flange Connector: CLF/MM (Metric)

Part Number	T Tube O.D.	Flange Seal	A	B	C	D	E	F	Finish
			Dimensions — mm						
10CLFA[ ]MM	10	A	84.1	34.9	57.9	22.2	7.1	6.4	3.2–6.3 Micrometer (Ra)
10CLFB[ ]MM	10	B	84.1	34.9	57.9	22.2	7.1	6.4	6.3–12.5 Micrometer (Ra)

Flange Seal A

Smooth

Flange Seal B

Serrated / Concentric

The Lapped Flange Connector is used to allow safe and easy connections between process lines and instruments. The basic, one-piece unit consists of a GYROLOK® tube connection end and a 1/2" lap joint pipe flange. The flange end is dimensioned to meet "ANSI 2500" flange specifications. Available in "Smooth" or "Serrated/Concentric" seal faces, and in 316 Stainless Steel or MONEL®.

* [ ] see page 9 for material specifications.

Dimensions for reference only. Subject to change.

HOKE® Dielectric Tube Fittings

The GYROLOK® Dielectric Tube Fittings are for use in applications where electrical current flowing through a pipe or tube line must be interrupted to protect vital instrumentation and metering equipment.

Features

Thermoplastic Insulators with:
- Resistance in excess of 10^8 ohms at 70° F (21° C) and 50% relative humidity.
- Resistance in excess of 10^6 ohms at 100° F (38° C) and 90% relative humidity.

Metal components made of 316 Stainless Steel:

Appropriate orifice for fitting size (e.g. .358" orifice in 1/2" fitting):

GYROLOK® tube fitting ends:

Benefits

- Maximum safety and protection to critical monitoring station instrumentation.
- Long component life in rugged environment.
- Maximum flow capability provided by all sizes of GYROLOK® Dielectric tube fittings.
- The unique value and performance offered by GYROLOK®.

Technical Data

Body Construction Materials:	• 316 Stainless Steel
Insulator:	• Molded Thermoplastic
O-ring Material:	• 90 Durometer Viton
Back-up Washer:	• PTFE
Electrical Resistance of Insulators:	• 7.0 X 10^8 Ω @ 10 Volts DC @ 70° F and 50% relative humidity • 1.0 X 10^6 Ω @ 10 Volts DC @ 100° F and 90% relative humidity
Pressure Rating:	• 5000 PSIG @ 70° F (34,470kPa @ 21° C)
Temperature Rating:	• -40° F to +200° F (-40° C to +93° C)

Design

The Dielectric Tube Fitting must perform three primary functions:
1. Electrical insulation
2. Reliable fluid containment
3. Appropriate flow for line size

In the HOKE® design, the insulation function is performed by thermoplastic insulators which provide performance unequaled by any similar product.

A Viton O-ring and PTFE back up ring provide the containment function within the fitting. GYROLOK®'s 2-ferrule system provides sealing with the impulse line tubing.

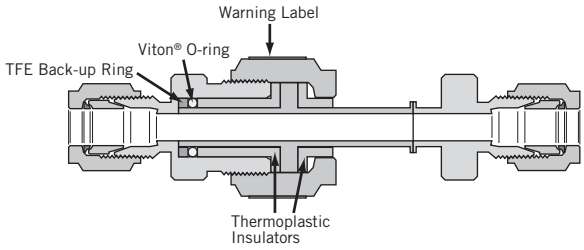

Appropriate flow for line size is achieved by providing the appropriate inside diameter for tubing size. See "E" dimensions in Dimensional Table.

WARNING: A "NO WRENCHING" label is placed on the hex of the nut in the insulation sections. Do not disconnect the labeled nut or allow this section to be torqued without proper backup. NPT connections (where applicable) must be installed prior to final tube connections.

Dielectric Unions: DU

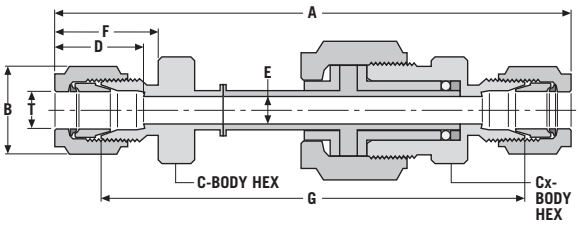

Part No.	T Tube O.D.	A	B	C Hex Flat	Cx Hex Flat	D	E	F	G
	Dimensions — inches								
4DU316	1/4	3.78	9/16	1/2	11/16	.64	.19	.77	3.12
6DU316	3/8	3.89	11/16	5/8	13/16	.71	.26	.80	3.23
8DU316	1/2	4.12	7/8	13/16	15/16	.96	.36	.91	3.21

Dielectric Male Connectors: DCM

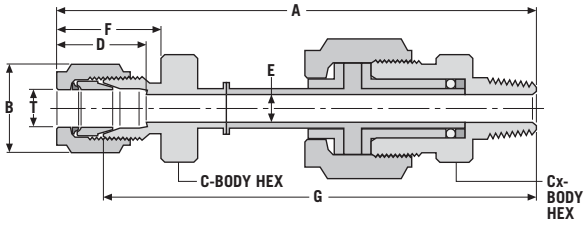

Part No.	T Tube O.D.	A	B	C Hex Flat	Cx Hex Flat	D	E	F	G
	Dimensions — inches								
6DCM4316	3/8	3.65	11/16	5/8	13/16	.71	.26	.80	3.33

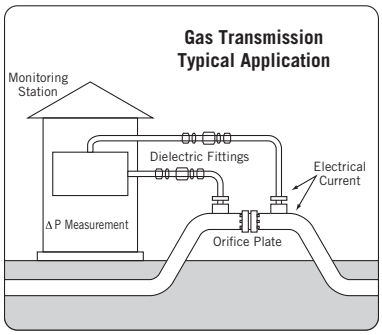

Application

Commonly used in the Natural Gas Transmission industry, the Dielectric Fitting will prevent current flow resulting from Impressed Current Cathodic Protection Systems, static electricity or even lightning strikes, from reaching sensitive monitoring station equipment.

Impressed Current Cathodic Protection Systems involve the application of a low voltage, low amperage direct current to a pipeline and eventual transfer of corrosive effects to a typically underground anode bed.

If the current flow is not interrupted before reaching the monitoring station critical equipment could be damaged or rendered inaccurate.

By installing GYROLOK®'s Dielectric Tube Fitting on impulse lines between the pipeline and the monitoring station, current flow is interrupted while full fluid flow is permitted.

HOKE® Chromatography Fittings

GYROLOK® tube fittings for use in gas or liquid chromatography applications are available in a variety of user-required configurations. HOKE's Chromatography Fittings feature low dead volumes, male nut designs, as well as configurations utilizing either press-fit or drop-in frits. For user convenience, both frit versions are available in a number of micron sizes. By combining the needs of the Chromatography Fitting with key GYROLOK® features, such as controlled ferrule drive, the GYROLOK® Chromatography Fitting offers capabilities and performance that are unmatched in the industry.

Features	Benefits
Low Dead Volume:	• Accurate analysis and measurement
Press-fit or Drop-in Frits:	• Filter elements can be ordered factory installed (press-fit) or for field installation (drop-in) • 4 micron sizes are offered as standard, other sizes can be provided • Perform final filtering function for low volume fluids • Press-fit frit design reduces internal volume
Conical Diffusion Angle:	• Assures fluid contact over a greater surface, extending frit life while reducing unfiltered volume
Male Nut Configuration:	• Reduced internal volume
Fritless Configurations:	• For use with G.C. columns or L.C.'s with screens
Controlled Ferrule Drive:	• Long product life with outstanding remakeability
Interchangeability:	• Fittings are interchangeable with those of certain other manufacturers (consult factory)

Pressure Ratings
GYROLOK® Chromatography fittings are rated for working pressures higher than the tubing recommended for use. Refer to HOKE's Tubing Data Charts for specific information. (Contact factory for current version)

Temperature Ratings
316 Stainless Steel: -325° F to +800° F (-200° C to +425° C)

Note: Intermittent use to 1200° F is possible, however prolonged exposure to temperatures over 800° F is not recommended.

How to Order—Dilelectric Fittings

2	F	U	M	P	1	316
Tube O.D. in 1/16 of an inch; 2=2/16"=1/8"	Nut Type M = male F = female size 2 nut is female	Fitting Type U = union RU = reducing union CM = male connector	Nut Type M = male F = female only used if different nut type is used	Press-Fit Frit size P = .5 micron R = 2 micron T = 5 micron V = 10 micron	Tube Size in 1/16's of an inch	Material 316 stainless steel

Dimension Tables

Drop-In Frit

Part No.	Column O.D.
4FRIT[*]316	1/4
6FRIT[*]316	3/8
8FRIT[*]316	1/2
16FRIT[*]316	1

* Frit designator in microns: E=2.0, G=5.0, I=10. Assign appropriate letter code for desired size.

FOR YOUR SAFETY
IT IS SOLELY THE RESPONSIBILITY OF THE SYSTEM DESIGNER AND USER TO SELECT PRODUCTS SUITABLE FOR THEIR SPECIFIC APPLICATION REQUIREMENTS AND TO ENSURE PROPER INSTALLATION, OPERATION AND MAINTENANCE OF THESE PRODUCTS. MATERIAL COMPATIBILITY, PRODUCT RATINGS AND APPLICATION DETAILS SHOULD BE CONSIDERED IN THE SELECTION. IMPROPER SELECTION OR USE OF PRODUCTS DESCRIBED HEREIN CAN CAUSE PERSONAL INJURY OR PROPERTY DAMAGE.

Column End Fitting (for use with drop-in frit)

Part No.	T1 x T2 Tube Sizes	Dimensions — inches						
		L Length	D Dia.	H1 Hex Size	H2 Hex Size	H3 Hex Size	E Dim	F Dim
4FUM1316	1/4 x 1/16	1.57	0.020	9/16	1/2	1/4	41/64	51/64
6FUM1316	3/8 x 1/16	1.65	0.020	11/16	5/8	1/4	23/32	51/64
8FUM1316	1/2 x 1/16	1.93	0.030	7/8	13/16	1/4	31/32	51/64
16FUM1316	1 x 1/16	2.30	0.030	1 1/2	1 3/8	1/4	1 5/16	51/64

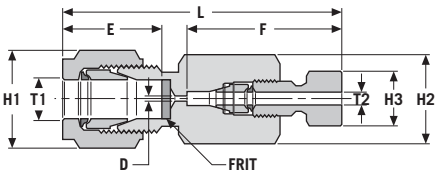

* [ ] see page 9 for material specifications.

Dimensions for reference only. Subject to change.

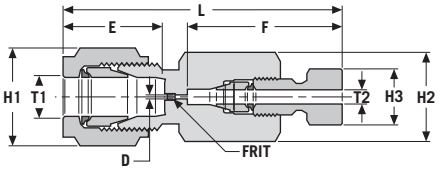

Column End Fitting (with press-fit frit)

Part No.	T1 x T2 Tube Sizes	L Length	D Dia.	H1 Hex Size	H2 Hex Size	H3 Hex Size	E Dim	F Dim
		Dimensions — inches						
2FUM[*]1316	1/8 X 1/16	1.50	0.013	7/16	7/16	1/4	9/16	51/64
4FUM[*]1316	1/4 X 1/16	1.57	0.013	9/16	1/2	1/4	41/64	51/64
6FUM[*]1316	3/8 X 1/16	1.64	0.013	11/16	5/8	1/4	23/32	51/64

* Frit designator in microns: **P**=0.5, **R**=2.0, **T**=5.0, **V**=10. Assign letter code to complete part number.

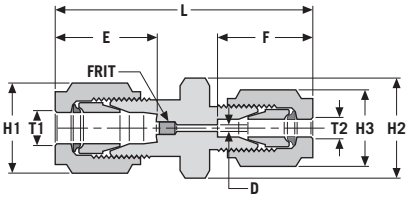

Union (with press-fit frit)

Part No.	T1 x T2 Tube Sizes	L Length	D Dia.	H1 Hex Size	H2 Hex Size	H3 Hex Size	E Dim	F Dim
		Dimensions — inches						
2FU[*]1316	1/8 X 1/16	1.36	0.020	7/16	7/16	5/16	9/16	13/32
4FU[*]1316	1/4 X 1/16	1.47	0.020	9/16	1/2	5/16	41/64	13/32
6FU[*]1316	3/8 X 1/16	1.56	0.020	11/16	5/8	5/16	23/32	13/32

* Frit designator in microns: **P**=0.5, **R**=2.0, **T**=5.0, **V**=10. Assign letter code to complete part number.

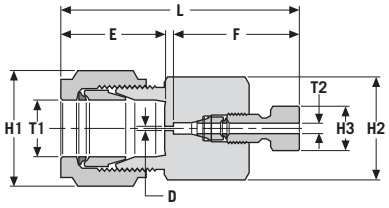

Column End Fitting

Part No.	T1 x T2 Tube Sizes	L Length	D Dia.	H1 Hex Size	H2 Hex Size	H3 Hex Size	E Dim	F Dim
		Dimensions — inches						
2FRUM1316	1/8 X 1/16	1.41	0.013	7/16	7/16	1/4	9/16	51/64
4FRUM1316	1/4 X 1/16	1.48	0.013	9/16	1/2	1/4	41/64	51/64
6FRUM1316	3/8 X 1/16	1.56	0.013	11/16	5/8	1/4	23/32	51/64

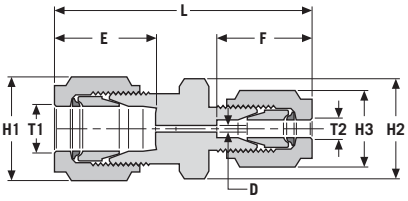

Reducing Union

Part No.	T1 x T2 Tube Sizes	L Length	D Dia.	H1 Hex Size	H2 Hex Size	H3 Hex Size	E Dim	F Dim
		Dimensions — inches						
2FRU1316	1/8 X 1/16	1.33	0.020	7/16	7/16	5/16	9/16	13/32
4FRU1316	1/4 X 1/16	1.47	0.020	9/16	1/2	5/16	41/64	13/32
6FRU1316	3/8 X 1/16	1.56	0.020	11/16	5/8	5/16	23/32	13/32

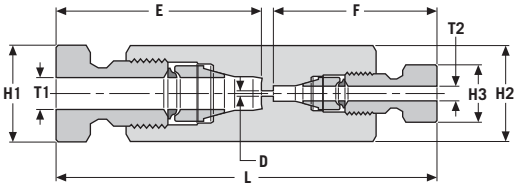

Reducing Union (male nut)

Part No.	T1 x T2 Tube Sizes	L Length	D Dia.	H1 Hex Size	H2 Hex Size	H3 Hex Size	E Dim	F Dim
		Dimensions — inches						
2MRU1316	1/8 X 1/16	1.91	0.013	3/8	7/16	1/4	1 1/16	51/64

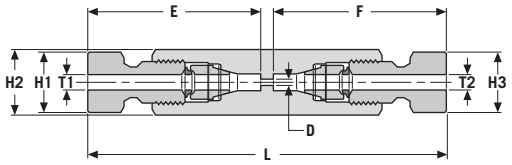

Union (male nut)

Part No.	T1 x T2 Tube Sizes	L Length	D Dia.	H1 Hex Size	H2 Hex Size	H3 Hex Size	E Dim	F Dim
		Dimensions — inches						
1MU316	1/16 X 1/16	1.84	0.013	1/4	5/16	1/4	51/64	51/64
2MU316	1/8 X 1/8	2.18	0.052	3/8	7/16	3/8	1 1/16	1 1/16

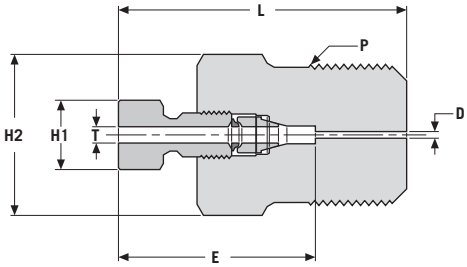

Male Connector (male nut)

Part No.	T Tube Size	P Pipe Size	L Length	D Dia.	H1 Hex Size	H2 Hex Size	E Dim
			Dimensions — inches				
1MCM1316	1/16	1/16 NPT	0.880	0.013	1/4	5/16	51/64
1MCM2316	1/16	1/8 NPT	0.940	0.013	1/4	7/16	51/64
1MCM4316	1/16	1/4 NPT	1.160	0.013	1/4	9/16	51/64

Note: All dimensions are for reference only.

GYROLOK® **Marking Tool**

Tube fitting users have long recognized that proper tube and tube fitting system function requires good tubing preparation followed by the use of correct installation procedures. Improper ferrule set in any flareless tube and fitting system may be the result of burrs created during the tube cutting process, improper tube insertion into the fitting, or inadequate tightening of the fitting nut. In order to maximize tube and fitting system performance and safety, HOKE® offers several tool options combined with detailed installer training. The GYROLOK® Marking Tool provides the installer with an economical means of ensuring both proper tubing insertion into the fitting and adequate nut tightening.

Standard **GMT**

Three-In-One **GMT**
(468GMT and 61012-GMTMM)

Usage Instructions

1. Squarely cut tubing, preferably with a tube cutter, and then deburr both inside and outside diameters as necessary.
2. Firmly insert tubing into the tool as far as possible.
3. Mark the tubing, as shown, with a Sharpie Ultrafine Point model 37001 marker. Take care to position perpendicular to the tool as shown for correct marking position.
4. Firmly insert the marked tubing into the GYROLOK® fitting to which it will be assembled. Finger-tighten the nut if below 12MM, tube tight if 12MM and above. As viewed from the side, the mark should NOT be visible at this point. If not visible, continue to step 5. If any part of the mark is visible above the GYROLOK® nut after finger-tightening below 12MM, tube tight if 12MM and above, the tubing is either not properly seated within the fitting or a ferrule is missing. Disassemble and determine cause.
5. If the mark is not visible after finger-tightening, continue by following appropriate GYROLOK® assembly instructions for tubing O.D. and wall thickness.

Part Numbers

SIZE	PART NUMBER	SIZE	PART NUMBER
1/8"	2GMT	6MM	6GMTMM
¼"	4GMT	8MM	8GMTMM
3/8"	6GMT	10MM	10GMTMM
½"	8GMT	12MM	12GMTMM
5/8"	10GMT	14MM	14GMTMM
¾"	12GMT	15MM	15GMTMM
1"	16GMT	16MM	16GMTMM
¼", 3/8", ½"	468GMT	18MM	18GMTMM
		20MM	20GMTMM
		22MM	22GMTMM
		25MM	25GMTMM
		6MM, 10MM, 12MM	61012-GMTMM

Pre-setting Tool: PST

Used strictly for pre-assembling ferrules to tubing.

Fractional

Part Number*	Tube O.D.	Dimensions — inches Length	Across Flats
1PST	1/16	2.25	3/8
2PST	1/8	1.94	11/16
3PST	3/16	2	1/2
4PST	1/4	1.94	11/16
6PST	3/8	1.97	11/16
8PST	1/2	2	7/8
12PST	3/4	2.50	1 1/8
16PST	1	2.50	1 1/2

Metric

Part Number*	Tube O.D.	Dimensions — mm Length	Across Flats
3PSTMM	3	49.2	17.3
6PSTMM	6	49.0	17.3
8PSTMM	8	50.0	17.3
10PSTMM	10	50.8	17.3
12PSTMM	12	50.8	22.0
14PSTMM	14	50.8	22.0
16PSTMM	16	63.5	28.4
18PSTMM	18	63.5	28.4
20PSTMM	20	63.5	28.4
22PSTMM	22	63.5	37.9
25PSTMM	25	63.5	37.9

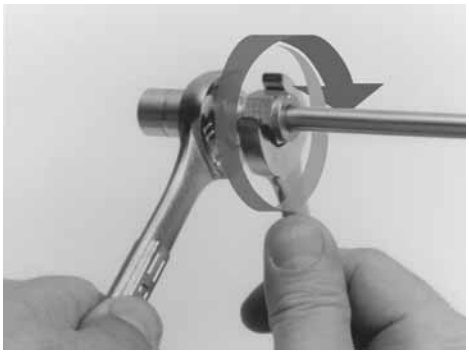

Usage Instructions

1. Place PST in vice.
2. Loosely assemble nut and ferrules to PST. Use GYROLOK® Safety Changer Nut & Ferrule Sets.
3. Follow standard GYROLOK® assembly instructions to set ferrules onto tubing, see page 58.
4. Loosen nut and remove tubing with pre-set ferrules and nut.
5. With pre-set ferrules and nut in permanent location, reassemble tubing by following GYROLOK® reassembly instructions on page 58.

Note: Threads of pre-setting tools should be lubricated the very first time and relubricated every tenth time thereafter.

* [ ] see page 9 for material specifications.

Dimensions for reference only. Subject to change.

Leak Detective Products

HOKE's Leak Detective products are used to detect leaks in pressurized gas systems. Use the Leak Detective to locate fugitive gas emissions in compressed air, oxygen, helium, hydrogen, nitrogen, natural gas, acetylene, and propane systems.

The Leak Detective is manufactured to meet specification MIL-L-25567D and is available in two types. Type 1 is for regular temperature applications 27° F to 200° F (-3° C to 95° C) while Type 2 is for colder application from -65° F to 200° F (-55° C to 95° C). The Leak Detective is packaged as standard in 8 ounce (230 ml) bottles or 1 gallon (4 liter) containers. A tracer tube is provided with each small bottle. 5 gallon containers and 55 gallon drums can also be provided upon request.

Packaging

Standard	Options
8 ounce	2 ounce
1 gallon	5 gallon
230 ml	55 gallon drum
4 liter	

Benefits

Safety:
- Oxygen compatible and manufactured in accordance with MIL-L-25567D
- Meets requirements of ASME Section V for composition and purity

Certifications:
- Material Safety Data Sheets (MSDS) available

Helps eliminate fugitive emissions:
- Verifies leak-tight systems

Cleanliness:
- Leaves virtually no residue

Technical Data

Specification
- Complies with MIL-L-25567D

Operating Temperatures
- Type 1: 27° F to 200° F (-3° C to 95° C)
- Type 2: -65° F to 200° F (-55° C to 95° C)

Usage Instructions

1. Extend 12" tracer tube
2. Direct solution
3. Squeeze bottle
4. Inspect system for foaming that indicates leakage

Ordering Information

PARTNUMBER	TYPE	LABEL LANGUAGE	SIZE
1LDE8OZ	1	English	8 ounce
1LDE1G	1	English	1 gallon
2LDE8OZ	2	English	8 ounce
2LDE1G	2	English	1 gallon
1LDEF230	1	English/ French	230 ml
1LDEF4L	1	English/ French	4 liter
2LDEF230	2	English/ French	230 ml
2LDEF4L	2	English/ French	4 liter
1LDS230	1	Spanish	230 ml
1LDS4L	1	Spanish	4 liter
2LDS230	2	Spanish	230 ml
2LDS4L	2	Spanish	4 liter

Hydraulic Pre-Setting Tool (HPST)

Larger tube fittings often require more effort to assemble properly than can be consistently achieved using hand wrenches. HOKE® offers a portable Hydraulic Pre-setting Tool to make the assembly of larger fittings:

- **Safer.** The Hydraulic Pre-setting Tool helps assure consistently correct assembly of larger fittings.
- **Simpler.** Interchangeable die sets allow easy conversion from one tube and fitting size to another.
- **More cost-efficient.** Using the Hydraulic Pre-setting Tool extends fitting life and reduces assembly time.

Using the portable Hydraulic Pre-setting Tool, the GYROLOK® nut and ferrule system is initially set onto the tubing. The pre-set fitting and tube assembly is then easily installed by following the GYROLOK® reassembly instructions.

Features	Benefits
One basic pre-setting head for all sizes:	• Provides versatility and value by covering sizes from ½" through 2" and 12mm through 50mm.
Interchangeable die sets:	• Allows easy conversion from one tube and fitting size to another.
10,000 PSI hydraulic pump:	• Provides the force necessary for consistent, fast, and simple fitting assembly.
Carrying case:	• Rugged steel carrying case offers easy transportation as well as a single storage location for all tool components.

How It Works

GYROLOK® nut and ferrule system components are assembled onto Hydraulic Pre-Setting Tool. Hand pump is operated until indicator arm releases.

Pre-set tube assembly is ready for installation per HOKE's published instructions.

How to Order

HOKE's Hydraulic Pre-Setting Tool, Pump and Ram Assembly. Carrying case is included. Carrying case has room for 6 die sets.

Order Part# **3HPST**, which includes:

- 3HPST assembly (see above picture)
- Grey indicator nut (use for 5/8" (14mm) thru 2" (38 mm) fittings)
- Black indicator nut (use for 1/2" (12mm) fittings ONLY)
- Black Case
- Enerpac Pump
- Die-Fixing bolt
- 5mm Allen Wrench
- Adjusting wrenches

Die Sets - Consists of one die and one jig for an individual tube size.

Jig

Die

2DJS - 12 MM

TUBE SIZE
Tube O.D. in 1/16"
Tube O.D. in mm (with "MM" suffix)

METRIC DESIGNATION (MILLIMETERS)

FRACTIONAL TUBE SIZE	PART NUMBER	METRIC TUBE SIZE	PART NUMBER
1/2"	2DJS-8	12 MM	2DJS-12MM
5/8"	2DJS-10	14 MM	2DJS-14MM
3/4"	2DJS-12	16 MM	2DJS-16MM
7/8"	2DJS-14	18 MM	2DJS-18MM
1"	2DJS-16	20 MM	2DJS-20MM
1-1/4"	2DJS-20	22 MM	2DJS-22MM
1-1/2"	2DJS-24	25 MM	2DJS-25MM
2"	2DJS-32	28 MM	2DJS-28MM
		30 MM	2DJS-30MM
		32 MM	2DJS-32MM
		38 MM	2DJS-38MM
		50 MM	2DJS-50MM

Dimensions for reference only. Subject to change.

GYROLOK® **RS Bonded Seals**

RS Bonded Seals

RS bonded gaskets create a seal with DIN 3852, Type A (RS) parallel threads. Gasket outer rings are available in both 316 stainless steel and zinc plated carbon steel. The inner ring, bonded to the outer ring, consists of either Buna-N or fluorocarbon FKM. To order, specify pipe size, outer ring, and inner ring material.

Note: For use only with GYROLOK® RS fittings

BSP PIPE SIZE	DIMENSIONS (INCHES)		
	A	B	C
1/8”	0.41	0.63	0.08
1/4”	0.54	0.81	0.08
3/8”	0.68	0.94	0.08
1/2”	0.85	1.13	0.09
3/4”	1.06	1.38	0.09
1”	1.33	1.69	0.09

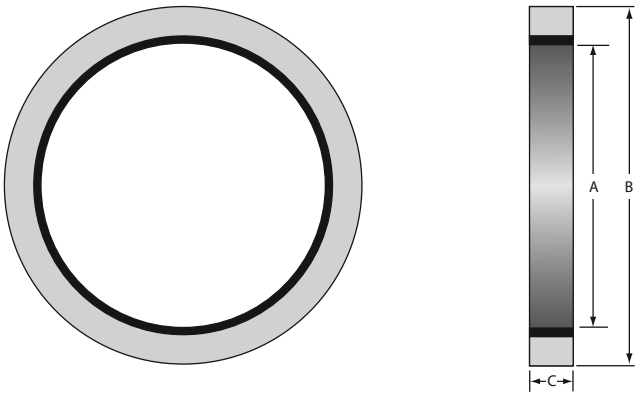

How to Order

[8] – RSG – [316] [B]

Inner Ring
- **B** Buna-N
- **V** Flouroelastomer FKM

Outer Ring
- **316** 316 stainless steel
- **CS** Carbon steel, zinc plated

BSP Pipe Sizes
- **2** G 1/8” A
- **4** G ¼” A
- **6** G 3/8” A
- **8** G ½” A
- **12** G ¾” A
- **16** G 1” A

Assembly Instructions

0-1/2" (12mm) MANUAL ASSEMBLY	½" – 1" (12mm-25mm) MANUAL OR HPST ASSEMBLY *based on installation conditions*	Above 1" (25mm) HPST ASSEMBLY REQUIRED ***Consult factory as needed***

Manual Assembly Instructions

Use of a PST (Manual Pre Setting Tool) is **recommended**
GYROLOK® Marking Tool (GMT) **is strongly recommended**.

Fully insert a correctly cut, deburred tube into the PST or fitting body until the tube rests on the sizing angle.

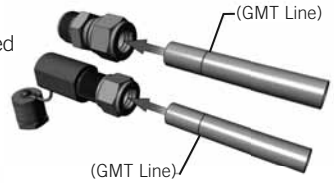

Holding the tube in the PST or Body, extract the nut and ferrules to visually ensure both ferrules are correctly oriented.

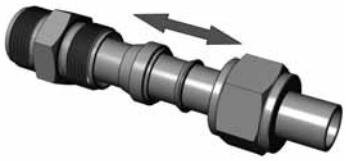

Once correct ferrule orientation is confirmed, thread & rotate the nut onto the PST or Body until hand-tight. The GMT witness line should **NOT** be visible.

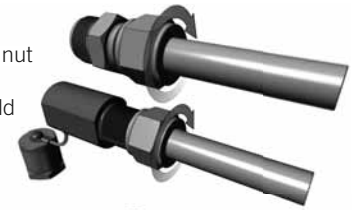

Establish a reference point for wrench tightening by marking both the fitting body and nut.

While supporting the PST or fitting body, tighten the nut with a wrench 1¼ turns. The pre-set or make-up is now complete. Confirm that the GMT witness line is now visible.

HPST Assembly Instructions

GYROLOK® Marking Tool (GMT) **is strongly recommended**.

Ensure the HPST Tooling Set is installed with the proper indicator nut.

Fully insert a correctly cut, deburred tube into the HPST head. Visually ensure both ferrules are correctly oriented. Thread & rotate the nut until hand-tight.

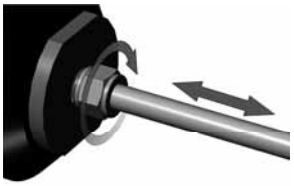

Set the indicator arm in the operating position by rotating the Indicator Nut counter-clockwise until it stops.

Pump the handle until the indicator arm releases.
CAUTION: Stop pumping immediately after the arm releases, as over-pumping may cause the tube to swell and stick. Pre-setting is now complete.

Insert the end with pre-set ferrules and nut into the fitting. Thread and rotate the nut until hand-tight. While supporting the fitting body, tighten the nut with a wrench 1/2 turn for tubing up to 1" (25mm). For tubing greater than 1" (25mm) 3/4 turn is required. The initial fitting make-up is now complete.

GYROLOK® MARKING TOOL (GMT) INSTRUCTIONS

Insert the correctly cut and deburred tube into the GMT as far as possible.

Mark the tubing as shown with an Ultra-Fine Point, Chloride-Free pen (recommended Sharpie Model 37001). Take care to position the marker perpendicular to the GMT, or insufficient ferrule set could occur.

REMAKE INSTRUCTIONS

Firmly insert end with the correctly set ferrules & nut into the fitting. Thread & rotate the nut until hand-tight. The GMT witness line should **NOT** be visible.

While supporting the fitting body, tighten the nut with a wrench ¼ turn.

Dimensions for reference only. Subject to change.

PLUGS & PORT CONNECTORS

Remove and discard ferrules. Firmly insert the plug or port connector into the end connection and hand-tighten the nut.

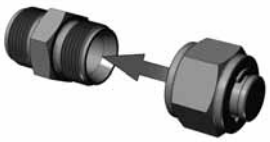

While supporting the fitting body, tighten the nut with a wrench ¼ turn.

TUBE ADAPTERS & REDUCERS

For this type of fitting please follow the Manual Assembly Instructions.

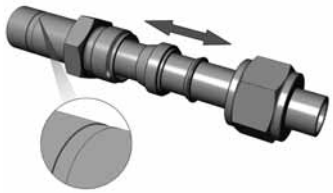

MALE NUT (INTEGRAL) PST INSTRUCTIONS

For this type of fitting please follow the Manual Assembly Instructions. After PST is used, assemble fitting to body and follow standard Remake Instructions.

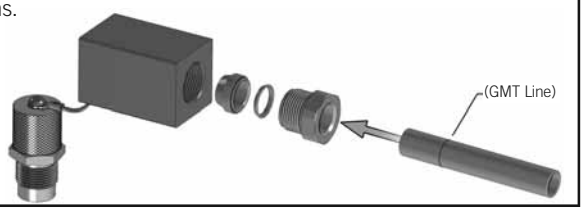

Integral GYROLOK® **Assembly Instructions (1/2" and below)**

MANUAL ASSEMBLY INSTRUCTIONS

1

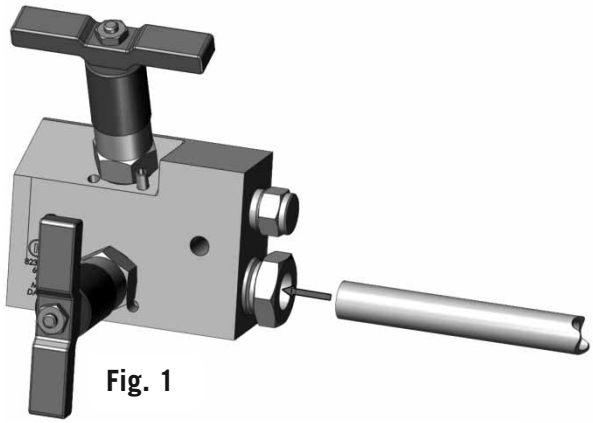

Fig. 1

Fully insert the tube into the manifold body.

2

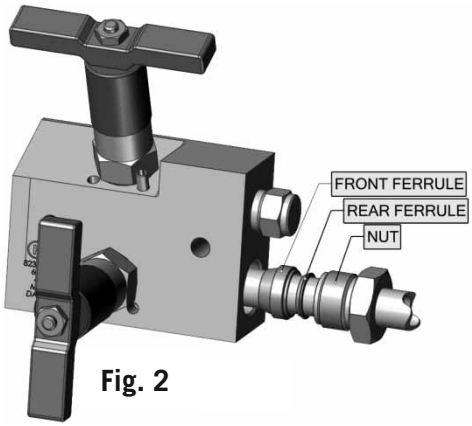

Fig. 2

Holding the tube in place, loosen the nut until it can be pulled over the tube. Extract the ferrules from the manifold body to ensure the front and rear ferrules are in the correct orientation (see Fig. 2).
Once correct ferrule orientation is confirmed, slide the nut into place and finger tighten the nut.

3

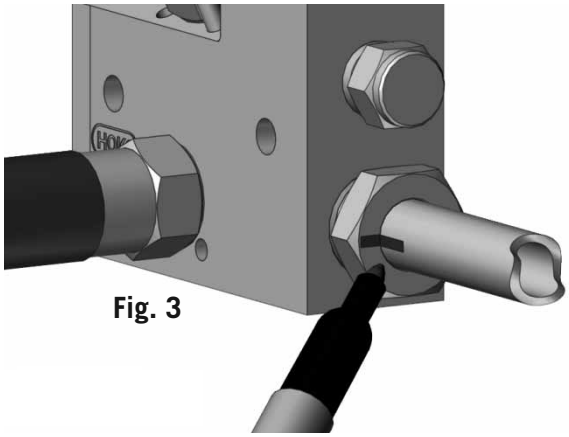

Fig. 3

Make sure the nut is finger-tight and then establish a consistent point for the wrench tightening by marking the tube and nut.

4

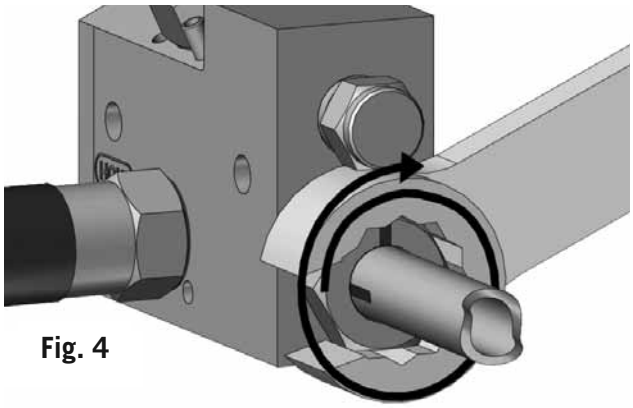

Fig. 4

With the manifold supported use a wrench to turn the nut 1-1/4 turns, clockwise, from the finger-tight position. When finished, the mark line on the nut should be 90 degrees clockwise from the marked line on the tubing. Assembly is complete.

REMAKE INSTRUCTIONS

1

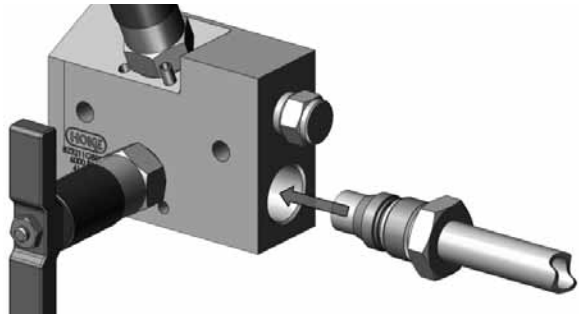

Insert the tube with the nut and ferrule assembly attached. Tighten the nut finger-tight.

2

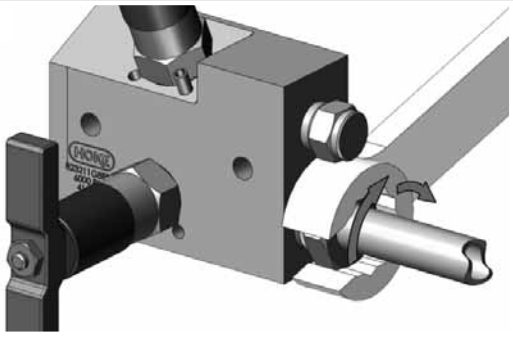

With the manifold supported use a wrench to turn the nut clockwise until there is a sudden rise in torque and then make an additional 1/8 of a turn.

We Care About Your Safety

WARNING

Improper selection or use of products described herein can cause Personal injury or property damage

Product information described herein is offered for use by the system designer and user.

It is solely the responsibility of the system designer and user to select products suitable for their specific application requirements and to ensure proper installation, operation and maintenance of these products. Material compatibility, product ratings, and application details should be considered in the selection.

Always contact your local HOKE® Distributor with any questions you may have before pressurizing and operating the product.

Safety Instructions

1. Do not tighten or loosen any part of a fitting or valve when the system is pressurized. Make sure the system is un-pressurized when tightening or loosening a fitting or valve connection.
2. Do not loosen GYROLOK® nut or any product component in order to relieve or bleed down system pressure.
3. Do not exceed pressure-temperature specifications stated in the appropriate catalog.
4. When the application involves use of a toxic or hazardous fluid, exercise extra caution during operation and maintenance.
5. Before assembling new, unused GYROLOK® tube fitting ends, loosen the GYROLOK® nut before inserting the tube to allow full insertion of the tube to the base of the body bore.
6. Always use tubing that is compatible with the fitting or valve material. Tubing appropriate for use with HOKE® products is described in Tubing Data Charts. For example, use 316 Stainless Steel fittings with 316 Stainless Steel tubing.
7. Always leave a length of straight tube between the tube bend and the fitting. A tube bent too close to the fitting connection may be a source of leakage.
8. During assembly of the GYROLOK® tube end, always hold the fitting or valve body with one wrench while separately wrench tightening the GYROLOK® nut. Follow the same precaution when disassembling.
9. Always use a HOKE® tube insert (basic part number “TI”) when assembling a GYROLOK® fitting to soft, pilable plastic tubing.
10. Always use proper thread lubricants or sealants on tapered pipe threads. Note that thread sealants may have lower temperature ratings than the basic fitting.
11. When installing an NPT ended valve, hold the valve body near the connection with one wrench, while separately wrench tightening the mating pipe. Turn the pipe, not the valve. Follow the same precaution when disconnecting.
12. Do not hold the valve handle when tightening an end connection.
13. Do not use excessive force to open or close a ball valve e.g. do not use a handle extension.
14. On initial installation, valves may require an adjustment of the packing nut due to storage variations, systems parameters, and cold flow properties of TFE.

The Small Bore Instrumentation Specialists

We specialize in small bore instrumentation products up to 2" that deliver benchmark performance quality & safety; provide the broadest array of superior alloy offerings in the market; decades of proven success in a wide range of industries; a roster of "who's who" customers & projects globally; original "Best Solution" engineering & designs; and are focused on continuous improvement in all aspects of our business.

Proudly Distributed By:

CRANE INSTRUMENTATION & SAMPLING Inc.
405 Centura Ct.
Spartanburg, SC 29305, USA

Tel: 1-864-574-7966
PO Box 4866, Spartanburg, SC 29305-4866 USA

Crane Co., and its subsidiaries cannot accept responsibility for possible errors in catalogues, brochures, other printed materials, and website information. Crane Co. reserves the right to alter its products without notice, including products already on order provided that such alteration can be made without changes being necessary in specifications already agreed. All trademarks in this material are the property of the Crane Co. or its subsidiaries. The Crane and Crane brands logotype (CENTER LINE®, COMPAC-NOZ®, CRANE®, DEPA® & ELRO®, DOPAK®, DUO-CHEK®, FLOWSEAL®, GYROLOK®, GO REGULATOR®, HOKE®, JENKINS®, KROMBACH®, NOZ-CHEK®, PACIFIC VALVES®, RESISTOFLEX®, REVO®, SAUNDERS®, STOCKHAM®, TEXAS SAMPLING®, TRIANGLE®, UNI-CHEK®, VALVES®, WTA®, and XOMOX®) are registered trademarks of Crane Co. All rights reserved.

79002ENG • 05/06/20 • APS46